JOB NAME: UNIVERSITY HOSPITAL McDUFFIE

CUSTOMER: J.E. DUNN CONSTRUCTION

ARCHITECT: PERKINS & WILL

LOCATION: THOMSON, GA

JOB NUMBER: 5669

Peachtree PROTECTIVE COVERS

1477 ROSEDALE DRIVE • HIRAM, GA 30141 • PHONE (770) 439-2120 • FAX (770) 439-2122

ERECTION DRAWING GENERAL NOTES:

FOOTING NOTE:
PPC DETAILS **1/5.00, 1/5.01, 1/5.02 & 1/5.03** NEEDS TO BE REVIEWED BY THE GC, ARCHITECT AND STRUCTURAL ENGINEER. THE ENGINEER OF RECORD (EOR) WILL NEED TO DESIGN/SIZE THE FOOTINGS TO RESIST THE LOADS SHOWN ON THE SHOP DRAWINGS. AS SHOWN IN THIS DETAIL, STYROFOAM BLOCKOUTS WILL BE PROVIDED BY PPC FOR INSTALLATION BY OTHERS. THE STYROFOAM BLOCKOUTS, WHEN INSTALLED, NEED TO BE FULLY EMBEDDED INTO THE CONCRETE FOOTINGS (TOP OF FOOTING = TOP OF BLOCKOUT). AS THE STRUCTURAL INTEGRITY OF THE CANOPY SYSTEM IS DEPENDENT ON THE SIZE, SHAPE AND PLACEMENT OF THE BLOCKOUTS, ANY VARIATION FROM DETAILS **1/5.00, 1/5.01, 1/5.02 & 1/5.03** NEEDS TO BE APPROVED BY PPC. UNLESS NOTIFIED OTHERWISE, PPC WILL ASSUME THAT THE FOOTINGS WILL BE PREPARED PER DETAILS **1/5.00, 1/5.01, 1/5.02 & 1/5.03** AND PER THE EOR'S SIZING INSTRUCTION. SHOULD THIS NOT BE THE CASE, PROJECT SCHEDULE DELAYS MAY BE ENCOUNTERED WHILE A REMEDY IS SOUGHT.

FABRICATION NOTE:
PPC WILL FIELD MEASURE THE SITE PRIOR TO FABRICATION OF THE CANOPY SYSTEM. FIELD MEASUREMENTS WILL BE TAKEN AFTER ALL FOOTINGS/BLOCKOUTS ARE SET AND ADJACENT/EXTERIOR BUILDING SKIN IS COMPLETE. AS PART OF THE FIELD MEASUREMENT PROCESS, WE WILL SHOOT THE ELEVATION AT EACH COLUMN LOCATION AND MEASURE THE LOCATION OF EACH BLOCKOUT RELATIVE TO ONE ANOTHER, RELATIVE TO FINISHED FLOOR, AND RELATIVE TO THE SKIN OF THE BUILDING TO WHICH OUR SYSTEM WILL BE CONNECTED. FIELD MEASUREMENTS ARE TYPICALLY A REQUIREMENT OF THE SPECIFICATION AND ARE REQUIRED IN ORDER TO INSURE THAT THE CANOPY SYSTEM IS CONSTRUCTED TO FIT ACTUAL JOB SITE CONDITIONS. DUE TO THE NATURE OF EXTRUDED ALUMINUM CANOPY DESIGN, THE SYSTEM CANNOT BE "FABRICATED TO APPROVED SHOP DRAWINGS".

FINISH NOTE:
WITHIN THE FINISH SCHEDULE ON SHEET #1, PPC HAS INDICATED THE FINISH AND COLOR THAT WE UNDERSTAND TO BE THE ARCHITECT'S INTENT. THIS FINISH SCHEDULE IS IN ACCORDANCE WITH OUR PROPOSAL. APPROVAL OF THE SHOP DRAWINGS WITHOUT COMMENT IN THIS AREA WILL BE INTERPRETED AS APPROVAL OF THE FINISH/COLOR INDICATED. WHERE APPLICABLE A COLOR CHART IS PROVIDED FOR USE IN SELECTING PAINT COLOR. THE STANDARD COLORS OFFERED BY PPC ARE MARKED ON THIS CHART. TO AVOID ADDITIONAL COSTS AND/OR SCHEDULE DELAYS, IT IS IMPORTANT TO SELECT FROM THESE STANDARD COLORS WHEN THE FINISH SCHEDULE INDICATES THAT A STANDARD COLOR IS WARRANTED. IN CASES WHERE A CUSTOM COLOR OR A MATCH OF A PARTICULAR COLOR IS REQUIRED, PPC WILL REQUIRE A SAMPLE OF THAT COLOR TO MATCH. IN THESE INSTANCES A "MATCH SAMPLE" WILL BE PROVIDED BY PPC FOR THE ARCHITECT TO ACCEPT OR REJECT. MATERIALS CANNOT BE ORDERED UNTIL THIS "MATCH SAMPLE" IS ACCEPTED.

ATTACHMENT NOTE;
IN ACCORDANCE WITH OUR UNDERSTANDING OF THE CONTRACT DOCUMENTS, PPC HAS DETAILED THE CONNECTIONS TO ADJACENT STRUCTURE TO THE BEST OF OUR ABILITY. ALL CONNECTION DETAILS NEED TO BE REVIEWED BY THE GC, ARCHITECT AND STRUCTURAL ENGINEER. PLEASE PROVIDED ANY/ALL REQUESTED INFORMATION SO AS TO ASSURE OUR CANOPY (OR SUNSCREEN) CAN BE SUPPORTED PROPERLY. IF ANY QUESTIONS, PLEASE CONTACT PPC PROJECT MANAGEMENT.

DRAWING INDEX

G1	COVER SHEET
1.00	KEY-PLAN
1.01-1.05	COLUMN SETTING & DECK PLANS
2.00-2.01	ELEVATIONS
3.00-3.03	SECTIONS
4.00-4.12	ENLARGED DETAILS
5.00-5.02	FOOTINGS AND/OR BASE PLATES
6.00	FASTENER SCHEDULE

REVISION HISTORY

REV.	DATE	DESCRIPTION	DWN
A	10/25/13	1ST SUBMITTAL	RH
1	12/23/13	2ND SUBMITTAL	KR
2	1/16/14	INITIAL F&F	RH

MATERIAL SPECIFICATION

NOTE: SEALANT BETWEEN PEWTER COLORED PANELS TO BE DOW CORNING 795 COLOR: CHAMPAGNE

LOCATION	DESCRIPTION	FINISH	COLOR
CANOPY A (AMBULANCE CANOPY)	2 1/2"x6" FS DECK	2-COAT KYNAR	MATCH LARSON'S SILVERSMITH
	12" x 6" BEAM	2-COAT KYNAR	MATCH LARSON'S SILVERSMITH
	6" x 6" COLUMN	2-COAT KYNAR	MATCH LARSON'S SILVERSMITH
	6" FASCIA	2-COAT KYNAR	MATCH LARSON'S SILVERSMITH
CANOPY B (DISCHARGE CANOPY)	3 1/2" x 6" FS DECK	2-COAT KYNAR	MATCH LARSON'S SILVERSMITH
	12" x 6" BEAM	2-COAT KYNAR	MATCH LARSON'S SILVERSMITH
	6" x 6" COLUMN	2-COAT KYNAR	MATCH LARSON'S SILVERSMITH
	6" FASCIA	2-COAT KYNAR	MATCH LARSON'S SILVERSMITH
CANOPY C (CUP CANOPY)	4 1/2" CHAMFERED DECK	2-COAT KYNAR	MATCH LARSON'S SILVERSMITH
	10"x6" BEAM	2-COAT KYNAR	MATCH LARSON'S SILVERSMITH
	6" x 6" COLUMN	2-COAT KYNAR	MATCH LARSON'S SILVERSMITH
	6" FASCIA	2-COAT KYNAR	MATCH LARSON'S SILVERSMITH
	1/4" x 3" x 3" ANGLE	2-COAT KYNAR	MATCH LARSON'S SILVERSMITH
CANOPY D (ENTRY CANOPY)	3" DECK	2-COAT KYNAR	MATCH LARSON'S PEWTER M-37 (2)
	STACKED 10"x6"/10"x6" BEAM	2-COAT KYNAR	MATCH LARSON'S SILVERSMITH
	12" x 6" COLUMN	2-COAT KYNAR	MATCH LARSON'S SILVERSMITH
	COMPOSITE FASCIA	2-COAT KYNAR	MATCH LARSON'S SILVERSMITH (2)
CANOPY E (ED ENTRY CANOPY)	6" CHAMFERED DECK	2-COAT KYNAR	MATCH LARSON'S PEWTER M-37
	STACKED 10"x6"/10"x6" BEAM	2-COAT KYNAR	MATCH LARSON'S SILVERSMITH
	8" x 6" COLUMN	2-COAT KYNAR	MATCH LARSON'S SILVERSMITH
	COMPOSITE FASCIA	2-COAT KYNAR	MATCH LARSON'S SILVERSMITH

GC / ARCHITECT NOTE:
MILL FINISH ON UNEXPOSED COMPONENTS.

DATE:	10/25/13
DWN. BY:	RH
CHKD. BY:	RW
DRAWING NO.	G.1
PPC JOB NO.	5669

1 / 1.00 KEY PLAN
SCALE: 1/32"=1'-0" CANOPIES: A, B, C, D & E
REF.: A03-20

NORTH

Peachtree PROTECTIVE COVERS

REV.:	DATE	SUBJECT	DWG. BY

PROJECT: UNIVERSITY HOSPITAL McDUFFIE
CUSTOMER: J.E. DUNN CONSTRUCTION
ARCHITECT: PERKINS & WILL
LOCATION: THOMSON, GA

DATE: 10/25/13
DWN. BY: RH
CHKD. BY: RW
DRAWING NO. 1.00
PPC JOB NO. 5669

PRINT: 1/19/2014 SAVE: 1/16/2014
J:\Jobs\5669 - UNIVERSITY HOSPITAL MCDUFFIE\SB-FF\5669-SBFF.dwg

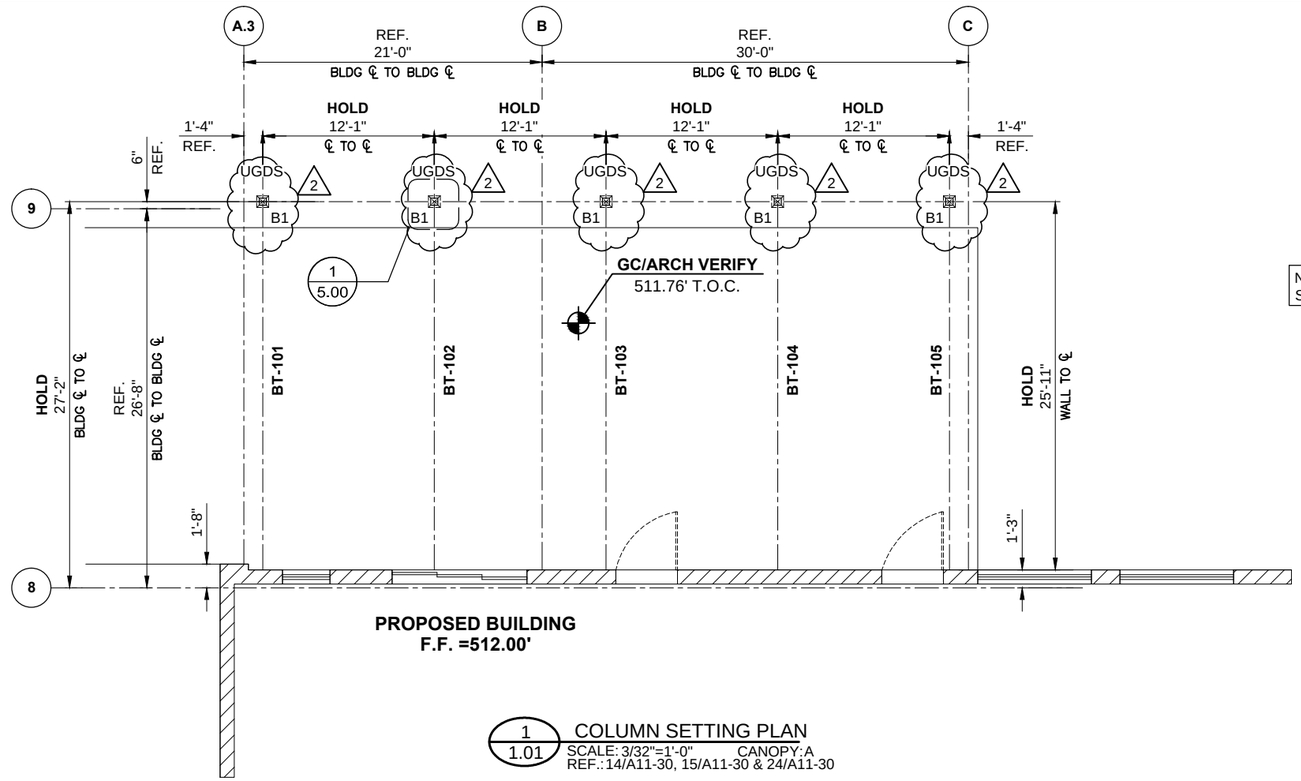

NOTE: SEE BLOCKOUT SCHEDULE ON SHEET 5.00

1 / 1.01 COLUMN SETTING PLAN
SCALE: 3/32"=1'-0" CANOPY:A
REF.:14/A11-30, 15/A11-30 & 24/A11-30

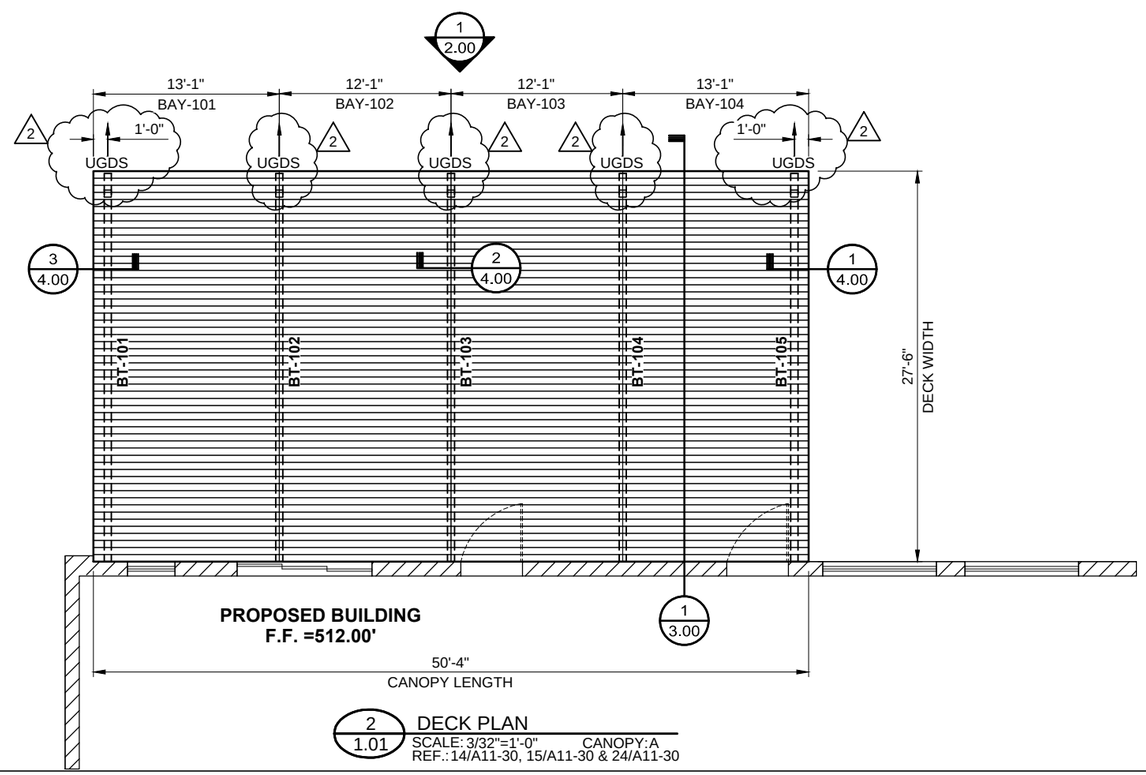

2 / 1.01 DECK PLAN
SCALE: 3/32"=1'-0" CANOPY:A
REF.:14/A11-30, 15/A11-30 & 24/A11-30

Peachtree PROTECTIVE COVERS

REV.	DATE	SUBJECT	DWG BY
2	1/16/14	INITIAL F&F	RH

PROJECT: UNIVERSITY HOSPITAL McDUFFIE
CUSTOMER: J.E. DUNN CONSTRUCTION
ARCHITECT: PERKINS & WILL
LOCATION: THOMSON, GA

DATE: 10/25/13
DWN. BY: RH
CHKD. BY: RW
DRAWING NO. 1.01
PPC JOB NO. 5669

PRINT: 1/16/2014 SAVE: 1/16/2014
J:\Jobs\5669 - UNIVERSITY HOSPITAL MCDUFFIE\SB-FF\5669-SBFF.dwg

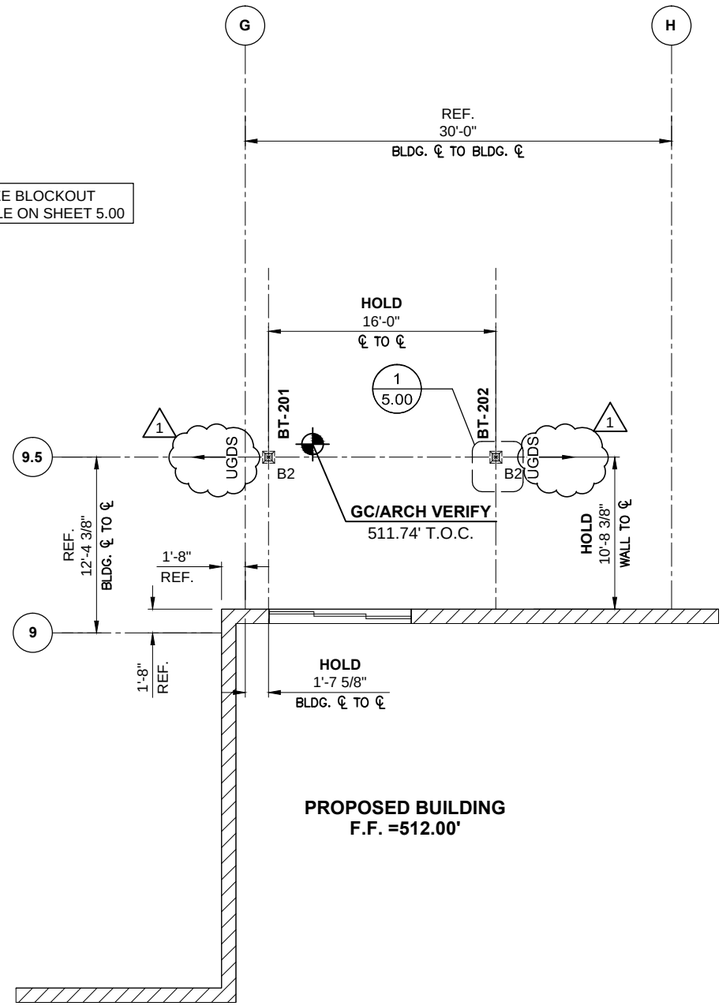

1 / 1.02 COLUMN SETTING PLAN
SCALE: 3/32"=1'-0" CANOPY: B
REF.: 16/A11-30, 17/A11-30 & 23/A11-30

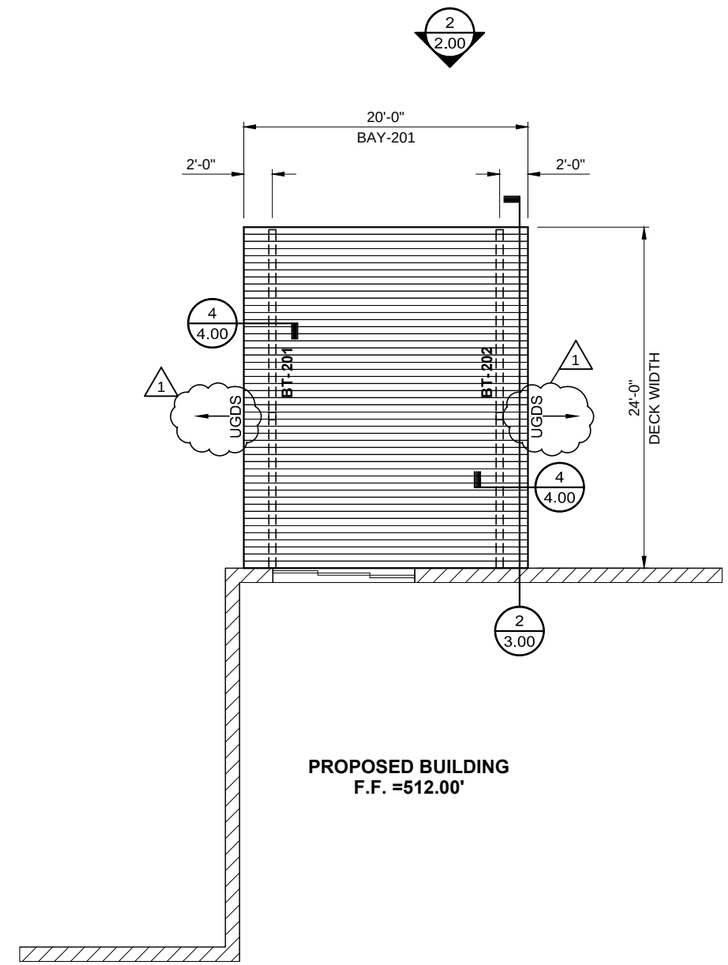

2 / 1.02 DECK PLAN
SCALE: 3/32"=1'-0" CANOPY: B
REF.: 16/A11-30, 17/A11-30 & 23/A11-30

Peachtree PROTECTIVE COVERS

REV.:	DATE	SUBJECT	DWG. BY
1	12/23/13	2ND SUBMITTAL	RH

PROJECT: UNIVERSITY HOSPITAL McDUFFIE
CUSTOMER: J.E. DUNN CONSTRUCTION
ARCHITECT: PERKINS & WILL
LOCATION: THOMSON, GA

DATE: 10/25/13
DWN. BY: RH
CHKD. BY: RW
DRAWING NO. 1.02
PPC JOB NO. 5669

SAVE: 1/16/2014
PRINT: 1/16/2014
J:\Jobs\5669 - UNIVERSITY HOSPITAL MCDUFFIE\SB-FF\5669-SBFF.dwg

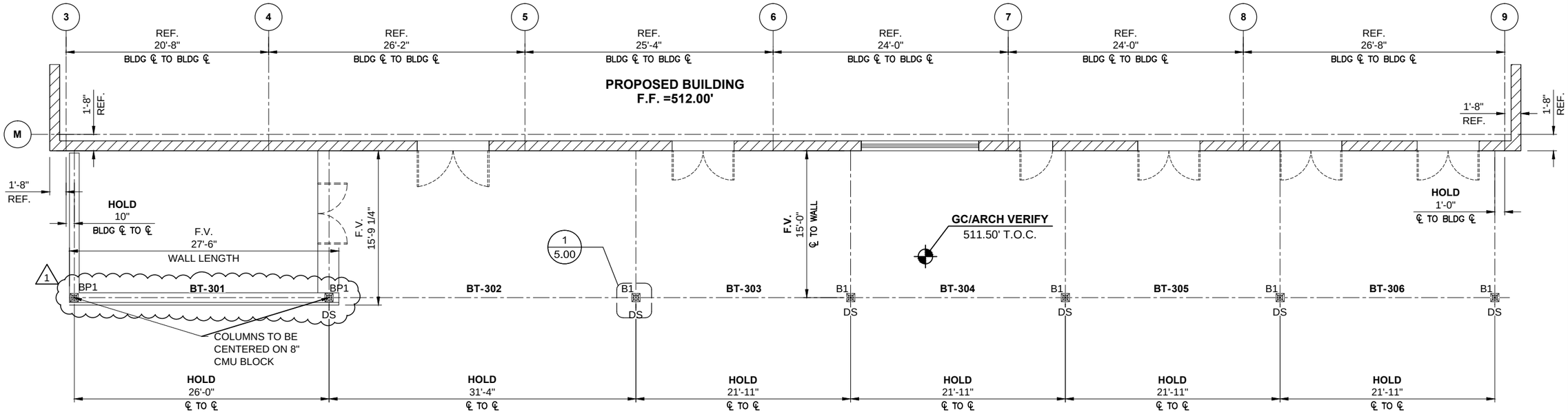

NOTE: SEE BLOCKOUT SCHEDULE ON SHEET 5.00

1/1.03 COLUMN SETTING PLAN
SCALE: 3/32"=1'-0" CANOPY: C
REF.: 18/A11-30, 19/A11-30 & 22/A11-30

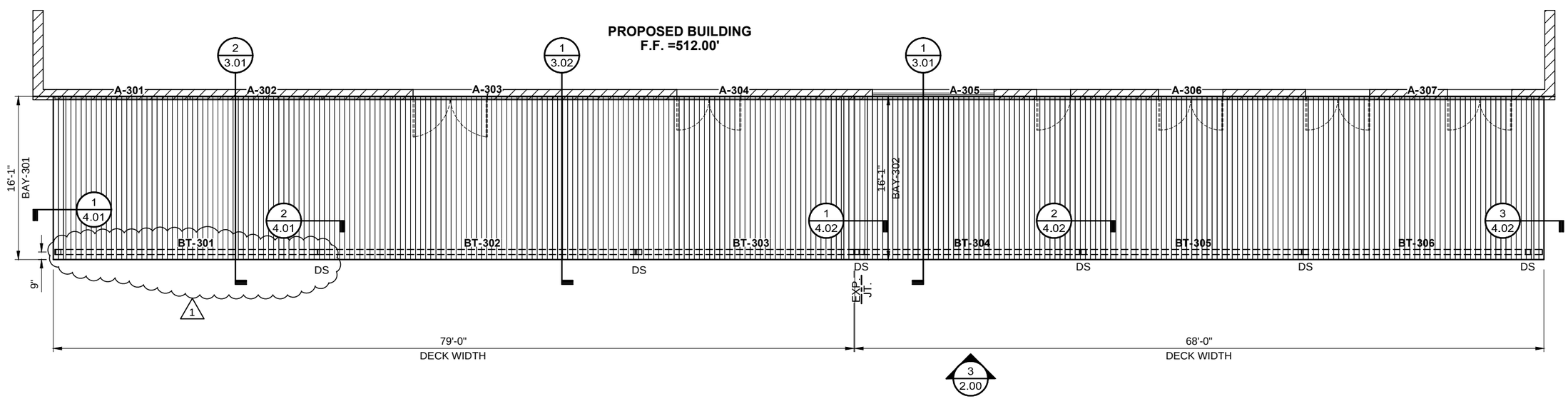

2/1.03 DECK PLAN
SCALE: 3/32"=1'-0" CANOPY: C
REF.: 18/A11-30, 19/A11-30 & 22/A11-30

Peachtree PROTECTIVE COVERS

REV.	DATE	SUBJECT	DWG. BY
1	12/23/13	2ND SUBMITTAL	RH

PROJECT: UNIVERSITY HOSPITAL McDUFFIE
CUSTOMER: J.E. DUNN CONSTRUCTION
ARCHITECT: PERKINS & WILL
LOCATION: THOMSON, GA

DATE: 10/25/13
DWN. BY: RH
CHKD. BY: RW
DRAWING NO. 1.03
PPC JOB NO. 5669

SAVE: 1/14/2014
PRINT: 1/19/2014
J:\Jobs\5669 - UNIVERSITY HOSPITAL MCDUFFIE\SB-FF\5669-SBFF.dwg

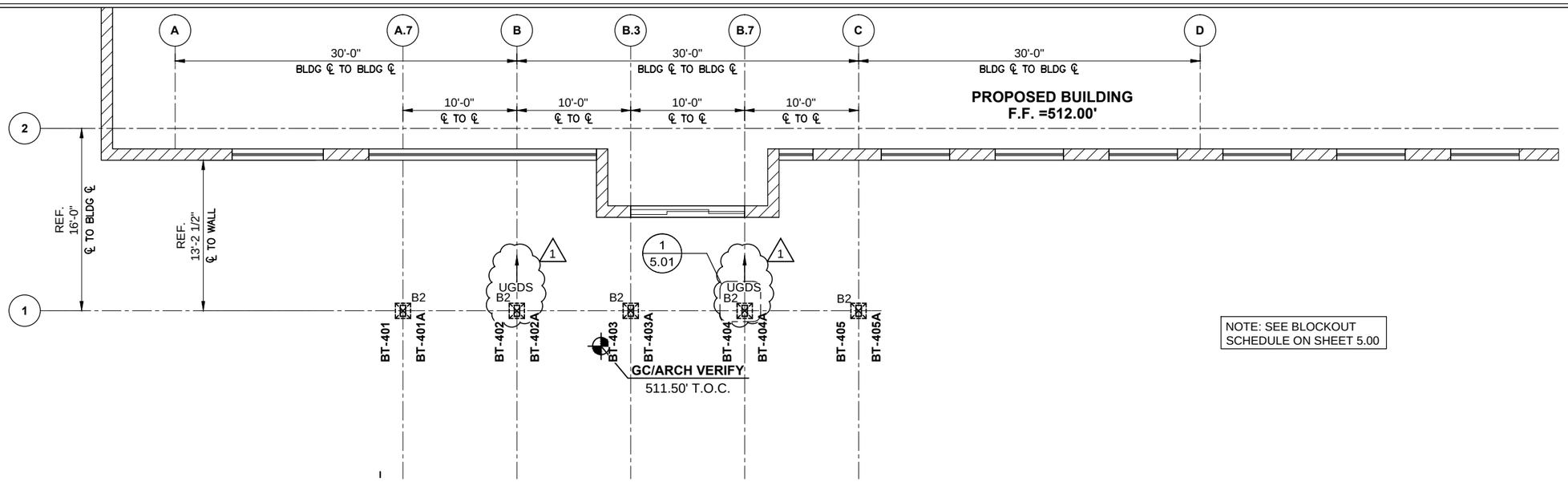

NOTE: SEE BLOCKOUT SCHEDULE ON SHEET 5.00

1 / 1.04 COLUMN SETTING PLAN
SCALE: 3/32"=1'-0" CANOPY:D
REF.: 1/A11-30, 2/A11-30 & 20/A11-30

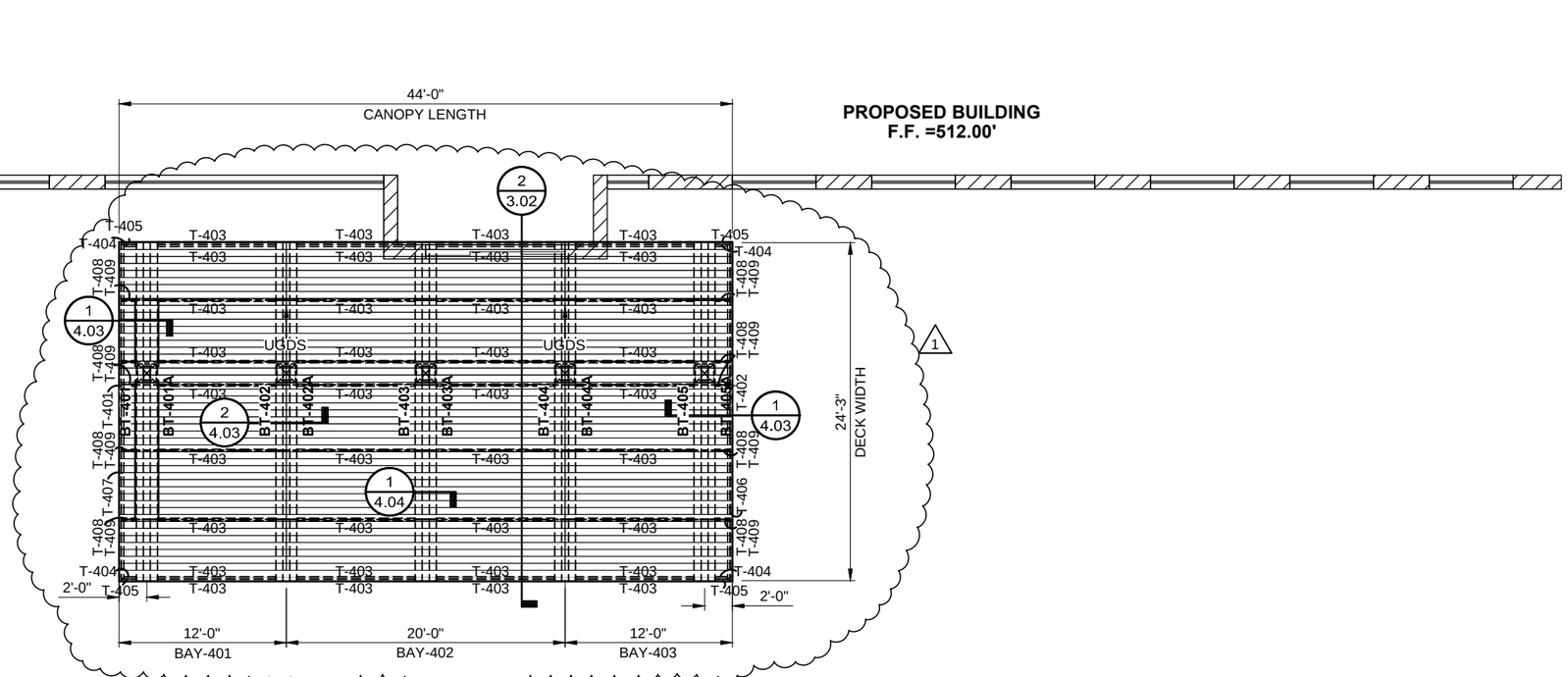

2 / 1.04 DECK PLAN
SCALE: 3/32"=1'-0" CANOPY:D
REF.: 1/A11-30, 2/A11-30 & 20/A11-30

1 / 2.01

Peachtree PROTECTIVE COVERS

REV.:	DATE	SUBJECT	DWG. BY
1	12/23/13	2ND SUBMITTAL	XXX

PROJECT: UNIVERSITY HOSPITAL McDUFFIE
CUSTOMER: J.E. DUNN CONSTRUCTION
ARCHITECT: PERKINS & WILL
LOCATION: THOMSON, GA

DATE: 10/25/13
DWN. BY: RH
CHKD. BY: RW
DRAWING NO. 1.04
PPC JOB NO. 5669

SAVE: 1/16/2014
PRINT: 1/16/2014
J:\Jobs\5669 - UNIVERSITY HOSPITAL MCDUFFIE\SB-FF\5669-SBFF.dwg

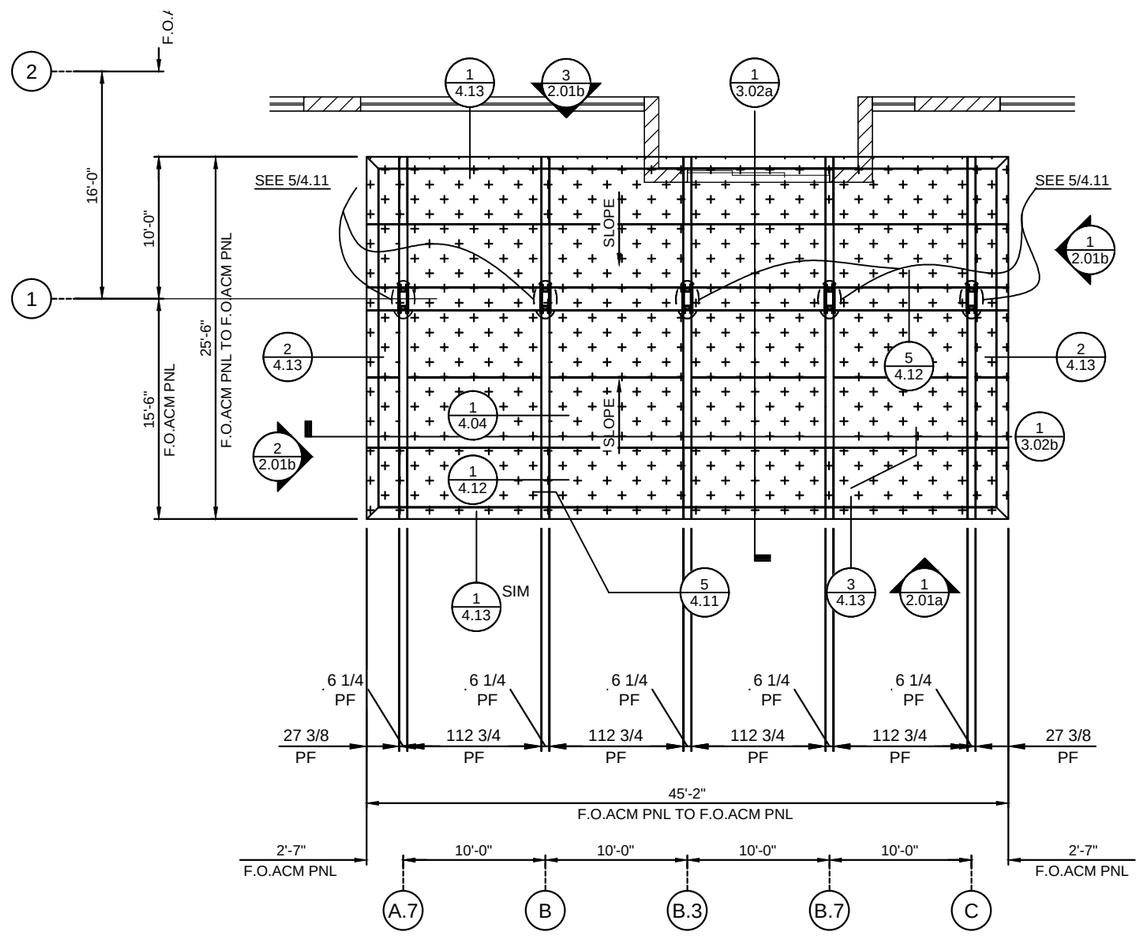

1 / 1.04a SOFFIT PLAN
SCALE: 3/32"=1'-0" CANOPY: D
REF.: 1/A11-30

Peachtree PROTECTIVE COVERS

REV.:	DATE	SUBJECT	DWG. BY
1	12/23/13	2ND SUBMITTAL	KR

PROJECT: UNIVERSITY HOSPITAL McDUFFIE
CUSTOMER: J.E. DUNN CONSTRUCTION
ARCHITECT: PERKINS & WILL
LOCATION: THOMSON, GA

DATE: 10/25/13
DWN. BY: RH
CHKD. BY: RW
DRAWING NO. 1.04a
PPC JOB NO. 5669

SAVE: 1/16/2014
PRINT: 1/16/2014
J:\Jobs\5669 - UNIVERSITY HOSPITAL MCDUFFIE\SB-FF\5669-SBFF.dwg

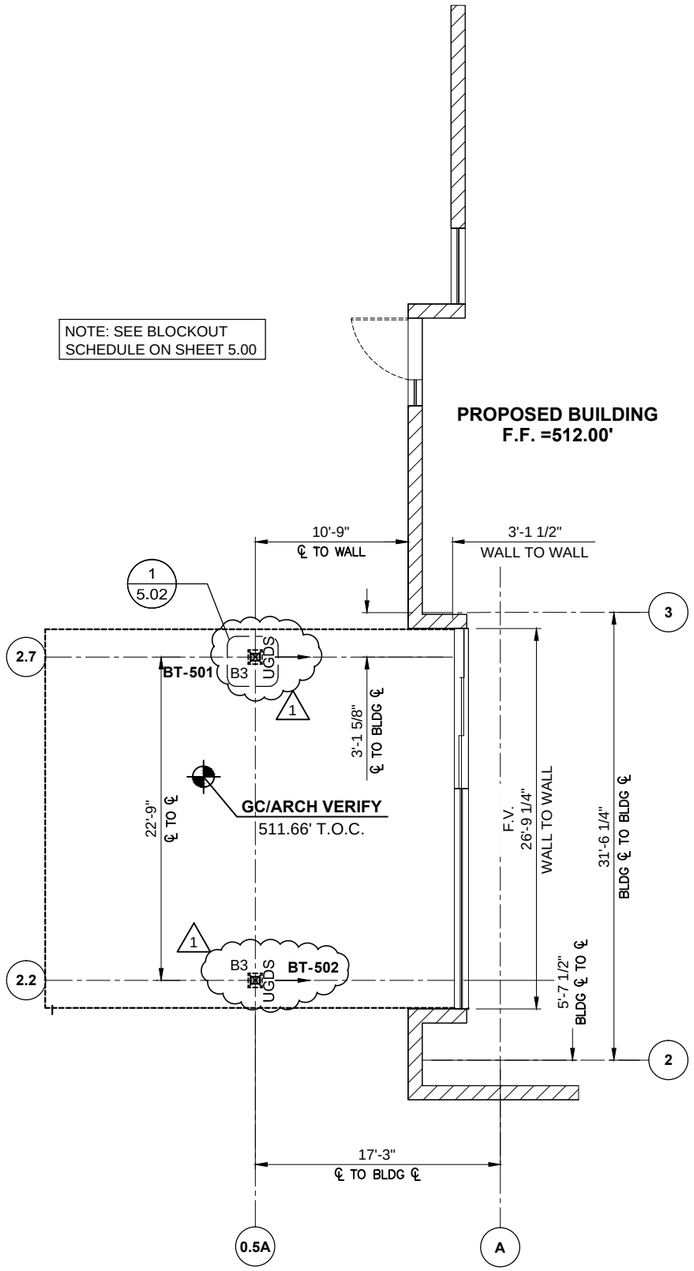

1 / 1.05 COLUMN SETTING PLAN
SCALE: 3/32"=1'-0" CANOPY:E
REF.: 8/A11-30, 11/A11-30 & 12/A11-30

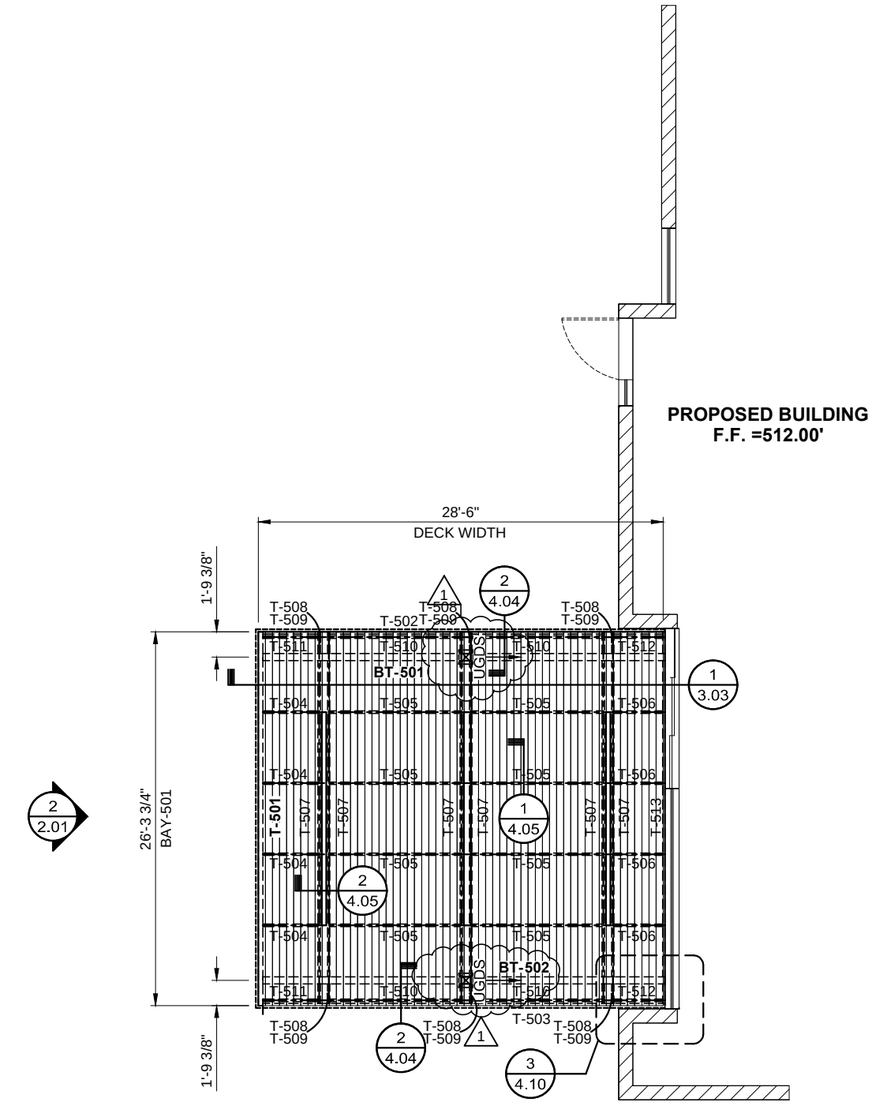

2 / 1.05 DECK PLAN
SCALE: 3/32"=1'-0" CANOPY:E
REF.: 8/A11-30, 11/A11-30 & 12/A11-30

Peachtree PROTECTIVE COVERS

REV.:	DATE	SUBJECT	DWG. BY
1	12/23/13	2ND SUBMITTAL	RH

PROJECT: UNIVERSITY HOSPITAL McDUFFIE
CUSTOMER: J.E. DUNN CONSTRUCTION
ARCHITECT: PERKINS & WILL
LOCATION: THOMSON, GA

DATE: 10/25/13
DWN. BY: RH
CHKD. BY: RW
DRAWING NO. 1.05
PPC JOB NO. 5669

SAVE: 1/14/2014
PRINT: 1/14/2014
J:\Jobs\5669 - UNIVERSITY HOSPITAL MCDUFFIE\SB-FF\5669-SBFF.dwg

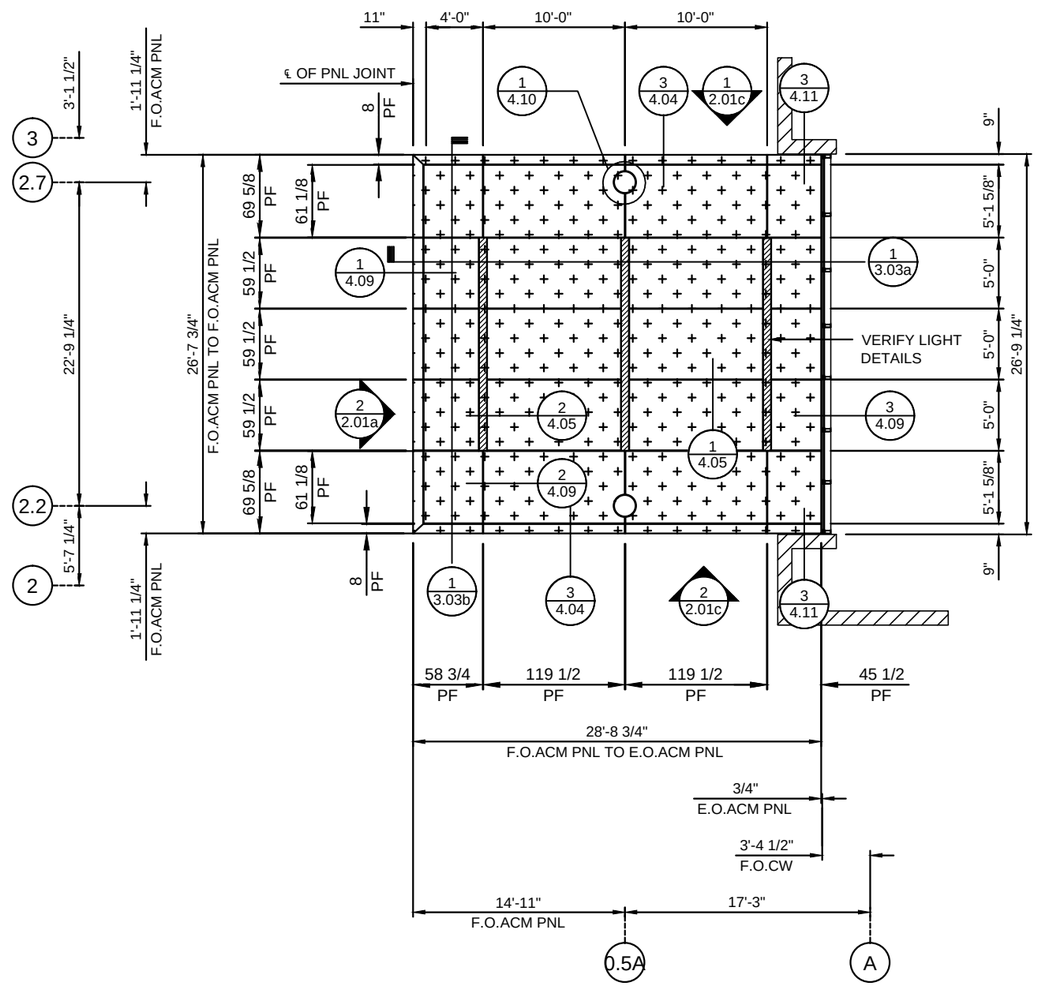

1 / 1.05a SOFFIT PLAN
SCALE: 3/32"=1'-0" CANOPY: E
REF.: 11/A11-30

Peachtree PROTECTIVE COVERS

REV.:	DATE	SUBJECT	DWG. BY

PROJECT: UNIVERSITY HOSPITAL McDUFFIE
CUSTOMER: J.E. DUNN CONSTRUCTION
ARCHITECT: PERKINS & WILL
LOCATION: THOMSON, GA

DATE: 10/25/13
DWN. BY: RH
CHKD. BY: RW
DRAWING NO. 1.05a
PPC JOB NO. 5669

PRINT: 1/14/2014 SAVE: 1/14/2014
J:\Jobs\5669 - UNIVERSITY HOSPITAL MCDUFFIE\SB-FF\5669-SBFF.dwg

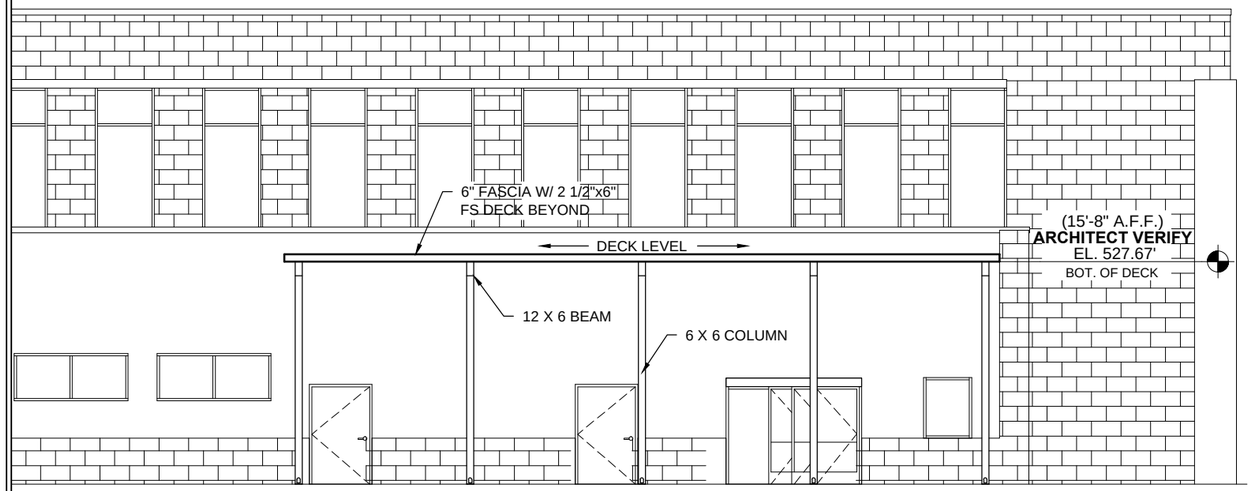

1 / 2.00 ELEVATION
SCALE: 3/32"=1'-0" CANOPY: A
REF.: 4/A11-01 & 7/A11-24

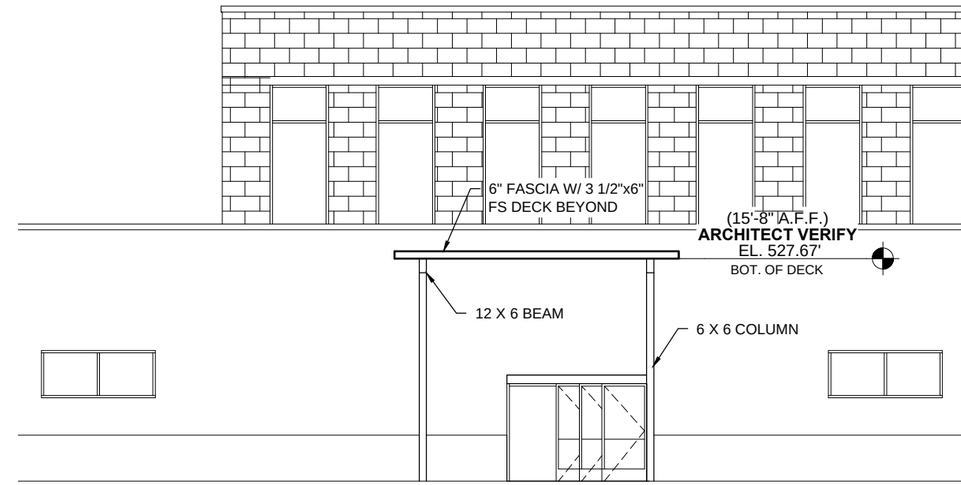

2 / 2.00 ELEVATION
SCALE: 3/32"=1'-0" CANOPY: B
REF.: 4/A11-01

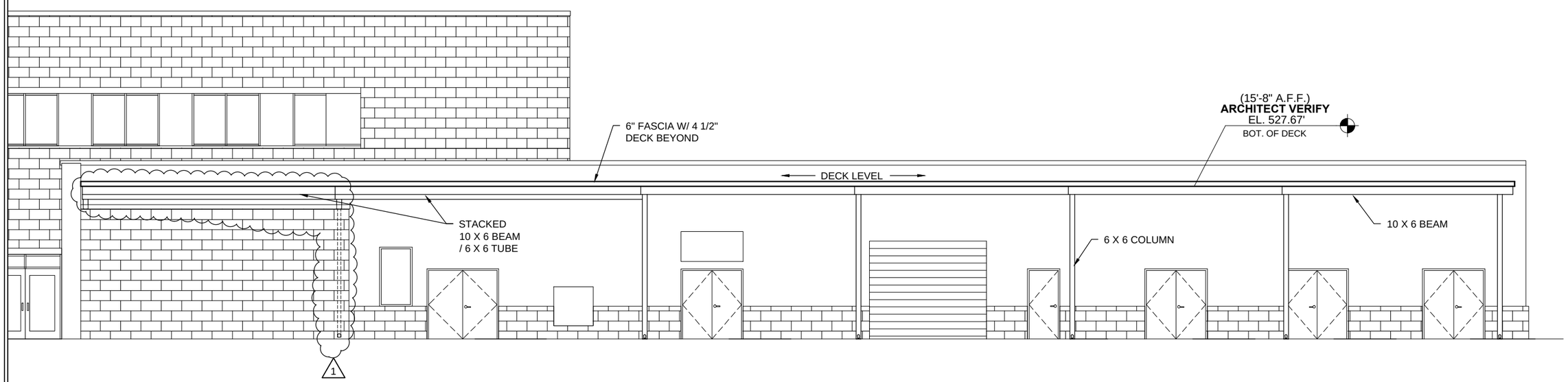

3 / 2.00 ELEVATION
SCALE: 3/32"=1'-0" CANOPY: C
REF.: 4/A11-01, 2/A11-01 & 20/A11-24

Peachtree PROTECTIVE COVERS

REV.:	DATE	SUBJECT	DWG. BY
1	12/23/13	2ND SUBMITTAL	RH

PROJECT: UNIVERSITY HOSPITAL McDUFFIE
CUSTOMER: J.E. DUNN CONSTRUCTION
ARCHITECT: PERKINS & WILL
LOCATION: THOMSON, GA

DATE: 10/25/13
DWN. BY: RH
CHKD. BY: RW
DRAWING NO. 2.00
PPC JOB NO. 5669

PRINT: 1/19/2014 SAVE:1/14/2014
J:\Jobs\5669 - UNIVERSITY HOSPITAL MCDUFFIE\SB-FF\5669-SBFF.dwg

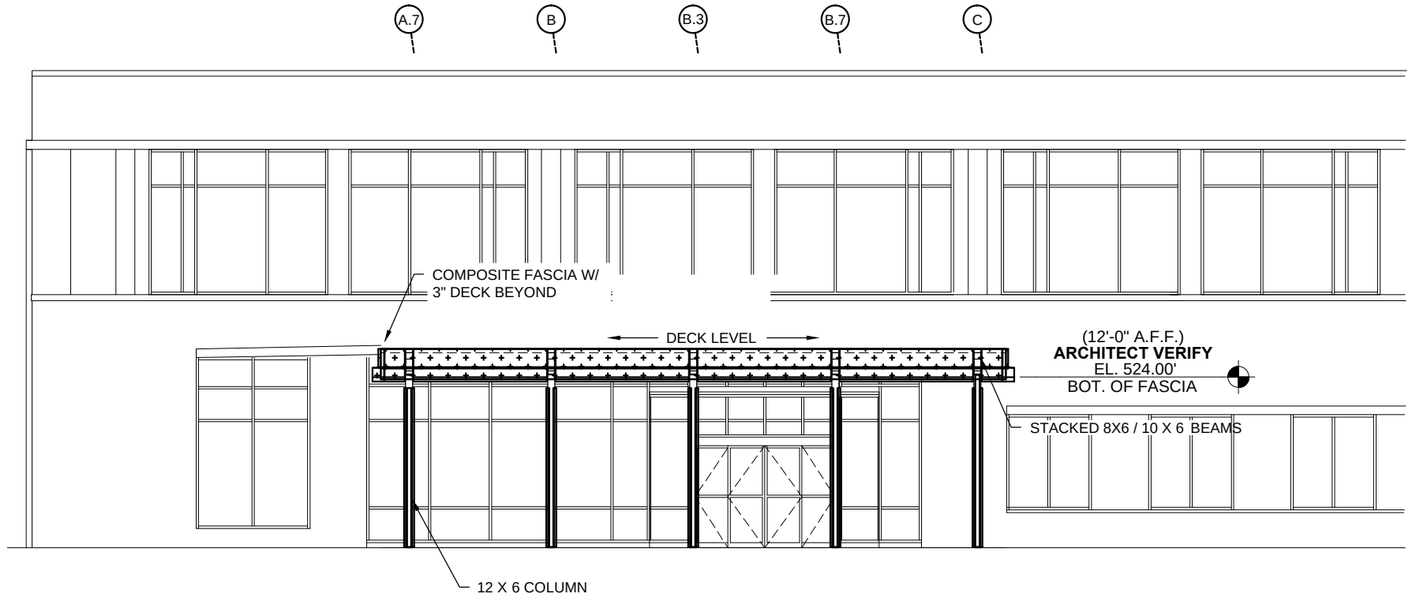

1 / 2.01 ELEVATION
SCALE: 3/32"=1'-0" CANOPY: D
REF.: 1/A11-01 & 6/A11-21

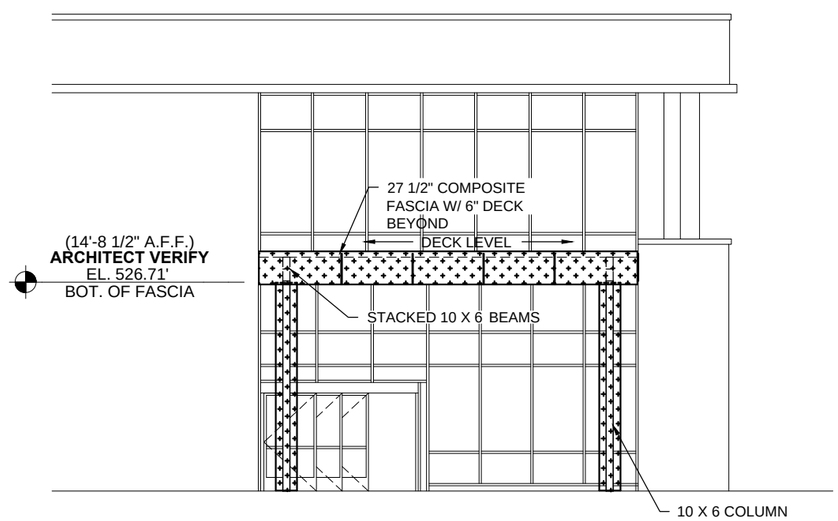

2 / 2.01 ELEVATION
SCALE: 3/32"=1'-0" CANOPY: E
REF.: 5/A11-01 & 8/A11-22

Peachtree PROTECTIVE COVERS

REV.:	DATE	SUBJECT	DWG. BY

PROJECT: UNIVERSITY HOSPITAL McDUFFIE
CUSTOMER: J.E. DUNN CONSTRUCTION
ARCHITECT: PERKINS & WILL
LOCATION: THOMSON, GA

DATE: 10/25/13
DWN. BY: RH
CHKD. BY: RW
DRAWING NO. 2.01
PPC JOB NO. 5669

PRINT: 1/19/2014 SAVE:1/14/2014
J:\Jobs\5669 - UNIVERSITY HOSPITAL MCDUFFIE\SB-FF\5669-SBFF.dwg

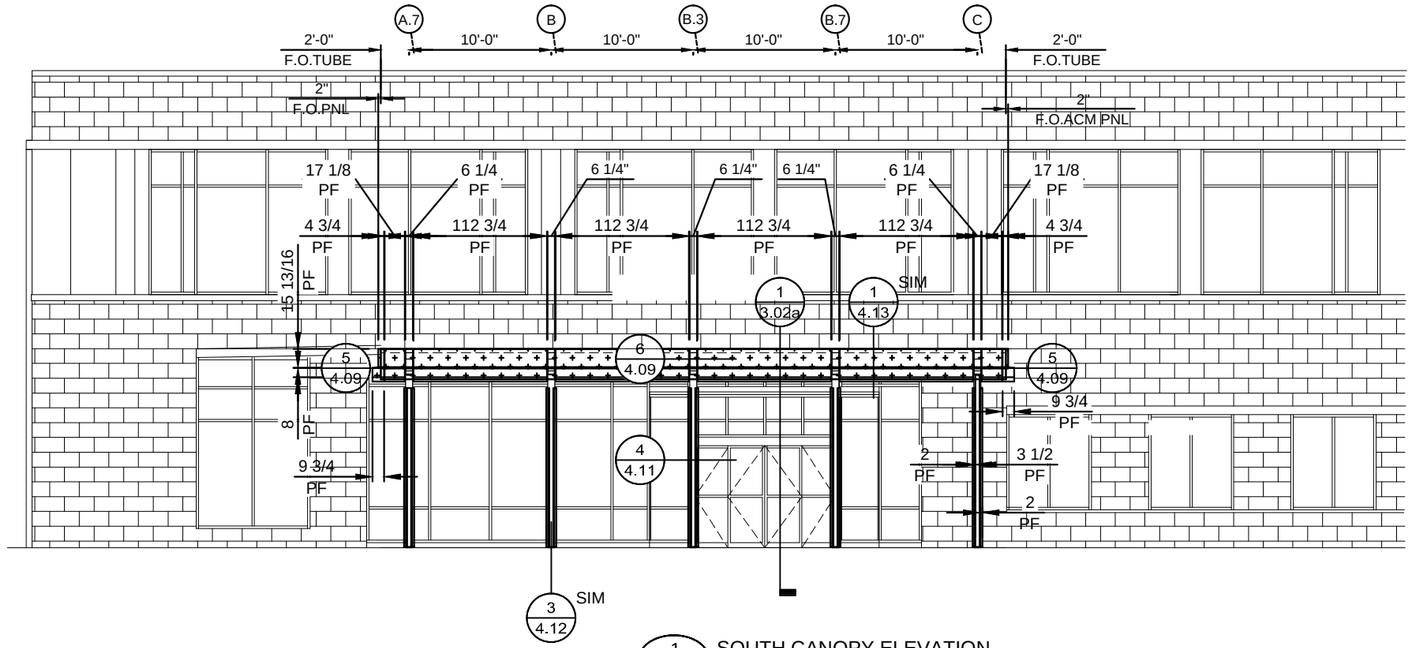

1 / 2.01a SOUTH CANOPY ELEVATION
SCALE: 3/32"=1'-0" CANOPY: D
REF.: 1/A11-01 & 6/A11-21

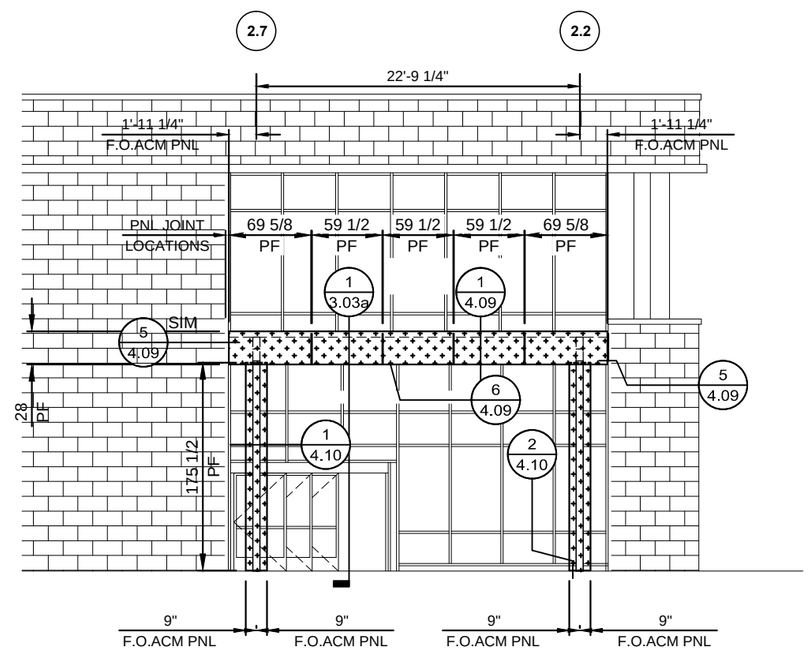

2 / 2.01a WEST CANOPY ELEVATION
SCALE: 3/32"=1'-0" CANOPY: E
REF.: 5/A11-01 & 8/A11-22

Peachtree PROTECTIVE COVERS

REV.:	DATE	SUBJECT	DWG. BY
1	12/23/13	2ND SUBMITTAL	KR

PROJECT: UNIVERSITY HOSPITAL McDUFFIE
CUSTOMER: J.E. DUNN CONSTRUCTION
ARCHITECT: PERKINS & WILL
LOCATION: THOMSON, GA

DATE: 10/25/13
DWN. BY: RH
CHKD. BY: RW
DRAWING NO. 2.01a
PPC JOB NO. 5669

PRINT: 11/4/2014 SAVE: 11/4/2014
J:\Jobs\5669 - UNIVERSITY HOSPITAL MCDUFFIE\SB-FF\5669-SBFF.dwg

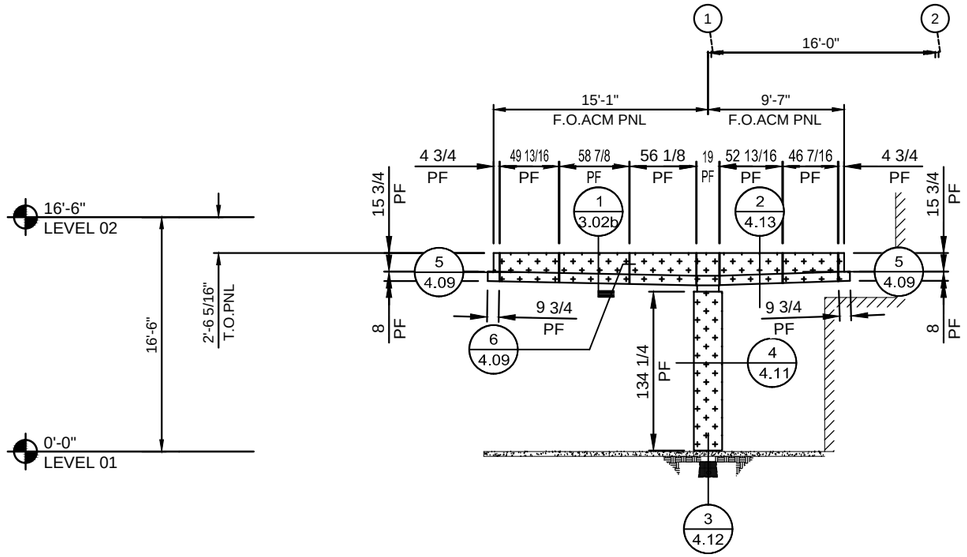

1 / 2.01b EAST ELEVATION
SCALE: 3/32"=1'-0" CANOPY: D
REF.: 3/A11-30 (SIM)

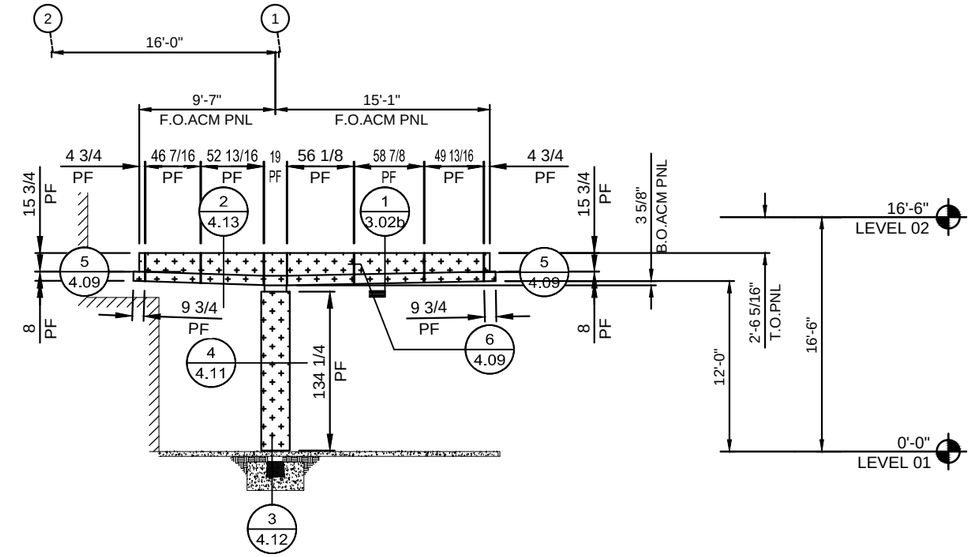

2 / 2.01b WEST ELEVATION
SCALE: 3/32"=1'-0" CANOPY: D
REF.: 3/A11-30

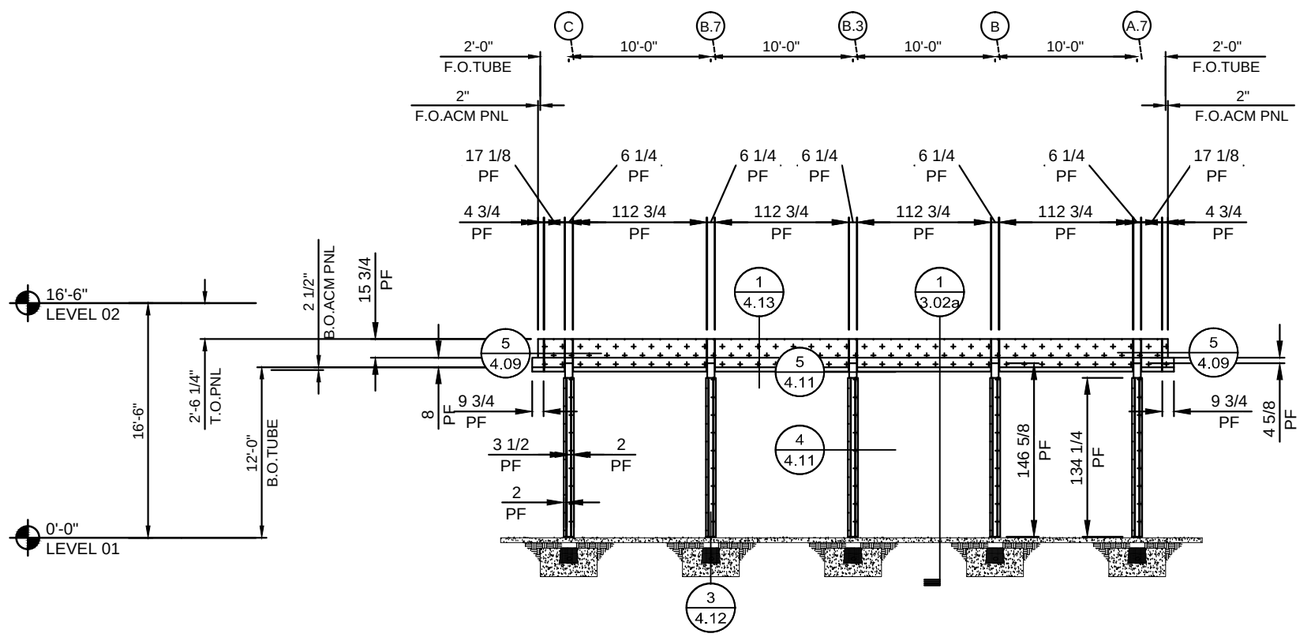

3 / 2.01b NORTH ELEVATION
SCALE: 3/32"=1'-0" CANOPY: D
REF.: 3/A11-30 (SIM)

Peachtree PROTECTIVE COVERS

REV.:	DATE	SUBJECT	DWG. BY
1	12/23/13	2ND SUBMITTAL	KR

PROJECT: UNIVERSITY HOSPITAL McDUFFIE
CUSTOMER: J.E. DUNN CONSTRUCTION
ARCHITECT: PERKINS & WILL
LOCATION: THOMSON, GA

DATE: 10/25/13
DWN. BY: RH
CHKD. BY: RW
DRAWING NO. 2.01b
PPC JOB NO. 5669

PRINT- 1/14/2014 SAVE-1/14/2014
J:\Jobs\5669 - UNIVERSITY HOSPITAL MCDUFFIE\SB-FF\5669-SBFF.dwg

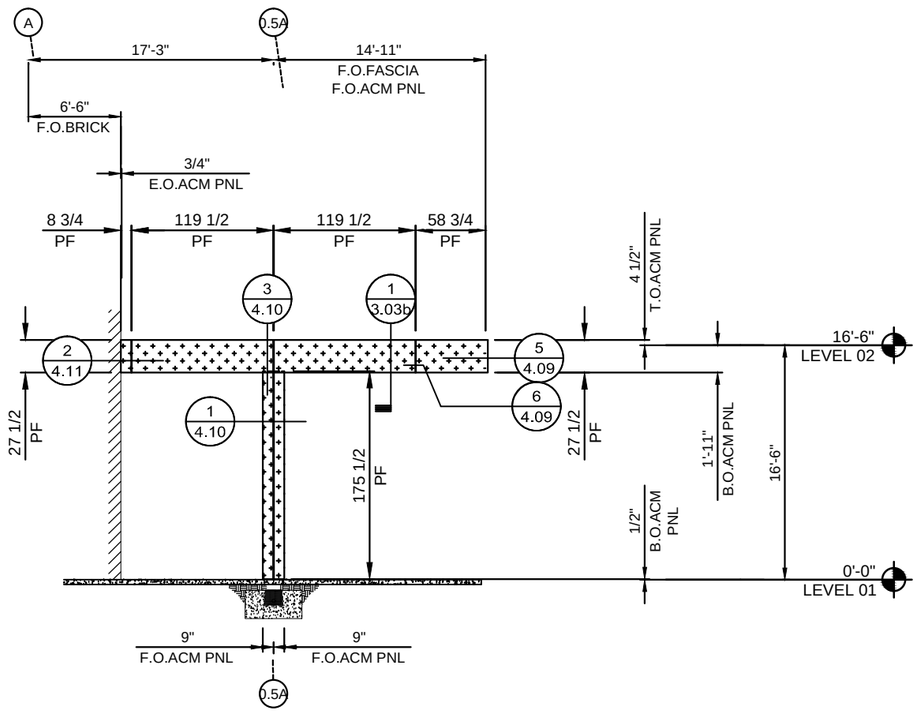

1 / 2.01c NORTH ELEVATION
SCALE: 3/32"=1'-0" CANOPY: E
REF.: 10/A11-30

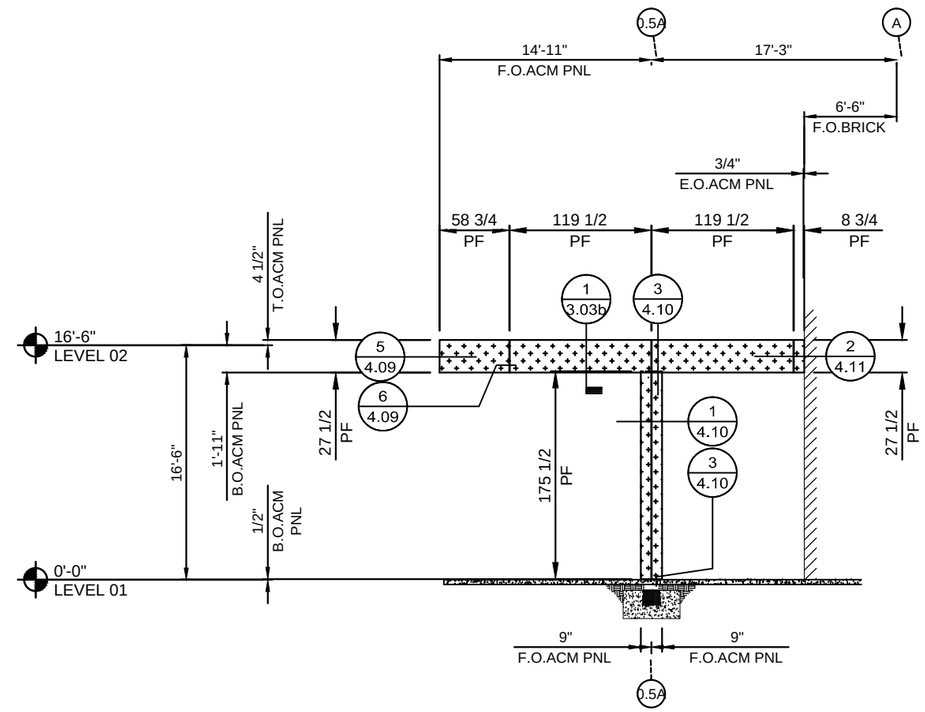

2 / 2.01c SOUTH ELEVATION
SCALE: 3/32"=1'-0" CANOPY: E
REF.: 10/A11-30

Peachtree PROTECTIVE COVERS

REV.:	DATE	SUBJECT	DWG. BY
1	12/23/13	2ND SUBMITTAL	KR

PROJECT: UNIVERSITY HOSPITAL McDUFFIE
CUSTOMER: J.E. DUNN CONSTRUCTION
ARCHITECT: PERKINS & WILL
LOCATION: THOMSON, GA

DATE: 10/25/13
DWN. BY: RH
CHKD. BY: RW
DRAWING NO. 2.01c
PPC JOB NO. 5669

PRINT: 1/19/2014 SAVE:1/14/2014
J:\Jobs\5669 - UNIVERSITY HOSPITAL MCDUFFIE\SB-FF\5669-SBFF.dwg

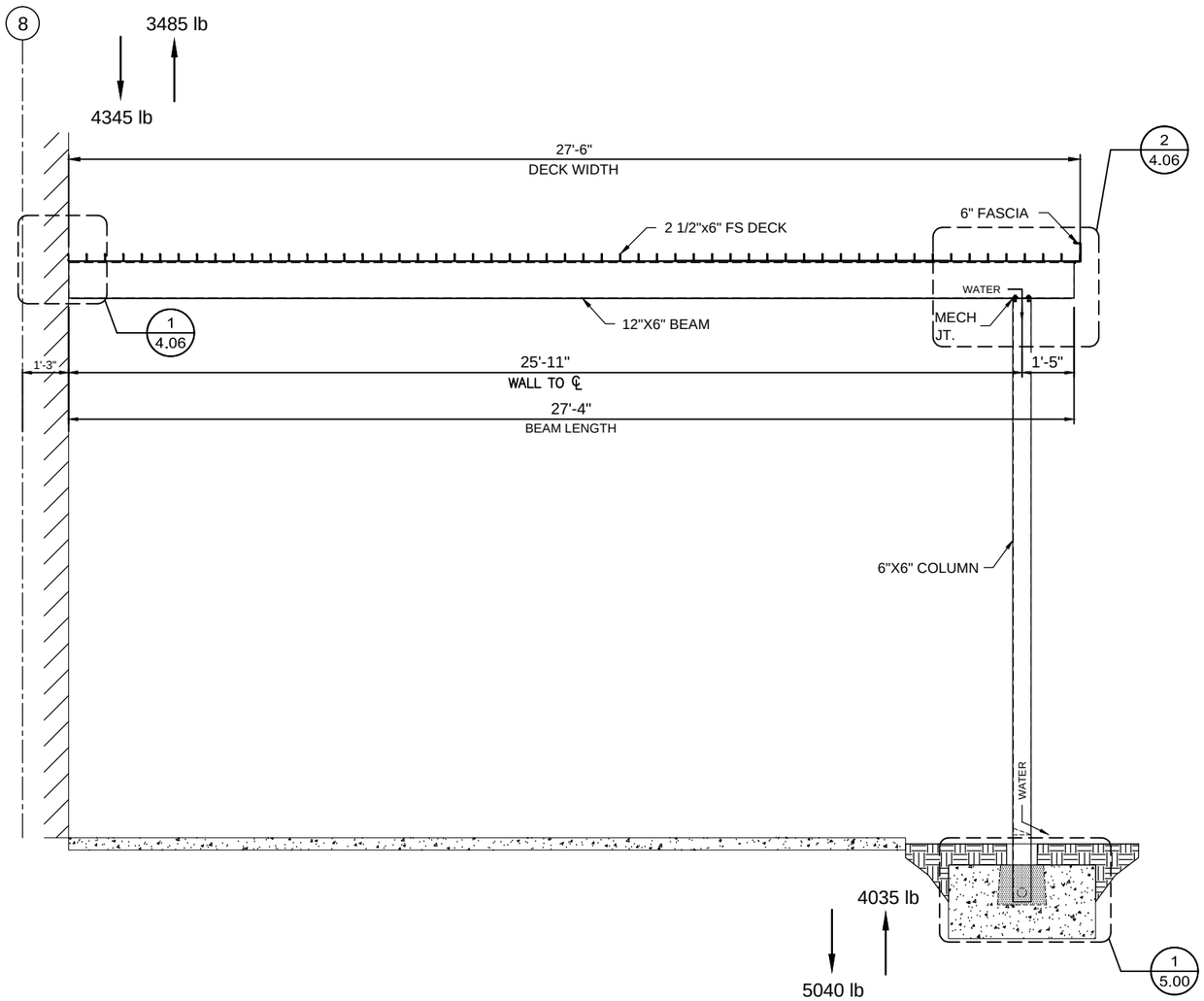

1 / 3.00 CANOPY SECTION
SCALE: 1/4"=1'-0" CANOPY:A
REF.: 9/A11-24

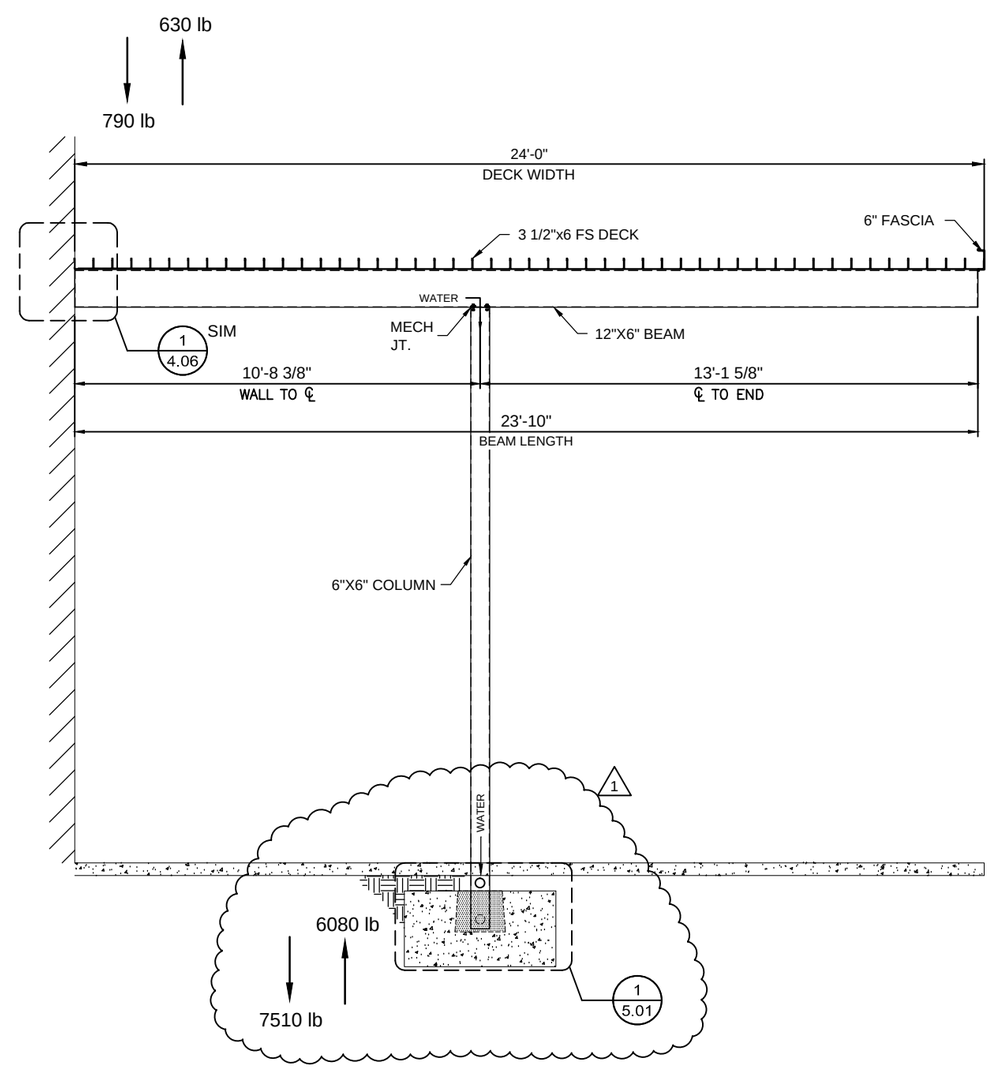

2 / 3.00 CANOPY SECTION
SCALE: 1/4"=1'-0" CANOPY:B
REF.: 21/A11-30

Peachtree PROTECTIVE COVERS

REV.:	DATE	SUBJECT	DWG. BY
1	12/23/13	2ND SUBMITTAL	RH

PROJECT: UNIVERSITY HOSPITAL McDUFFIE
CUSTOMER: J.E. DUNN CONSTRUCTION
ARCHITECT: PERKINS & WILL
LOCATION: THOMSON, GA

DATE: 10/25/13
DWN. BY: RH
CHKD. BY: RW
DRAWING NO. 3.00
PPC JOB NO. 5669

SAVE: 1/16/2014
PRINT: 1/16/2014
J:\Jobs\5669 - UNIVERSITY HOSPITAL MCDUFFIE\SB-FF\5669-SBFF.dwg

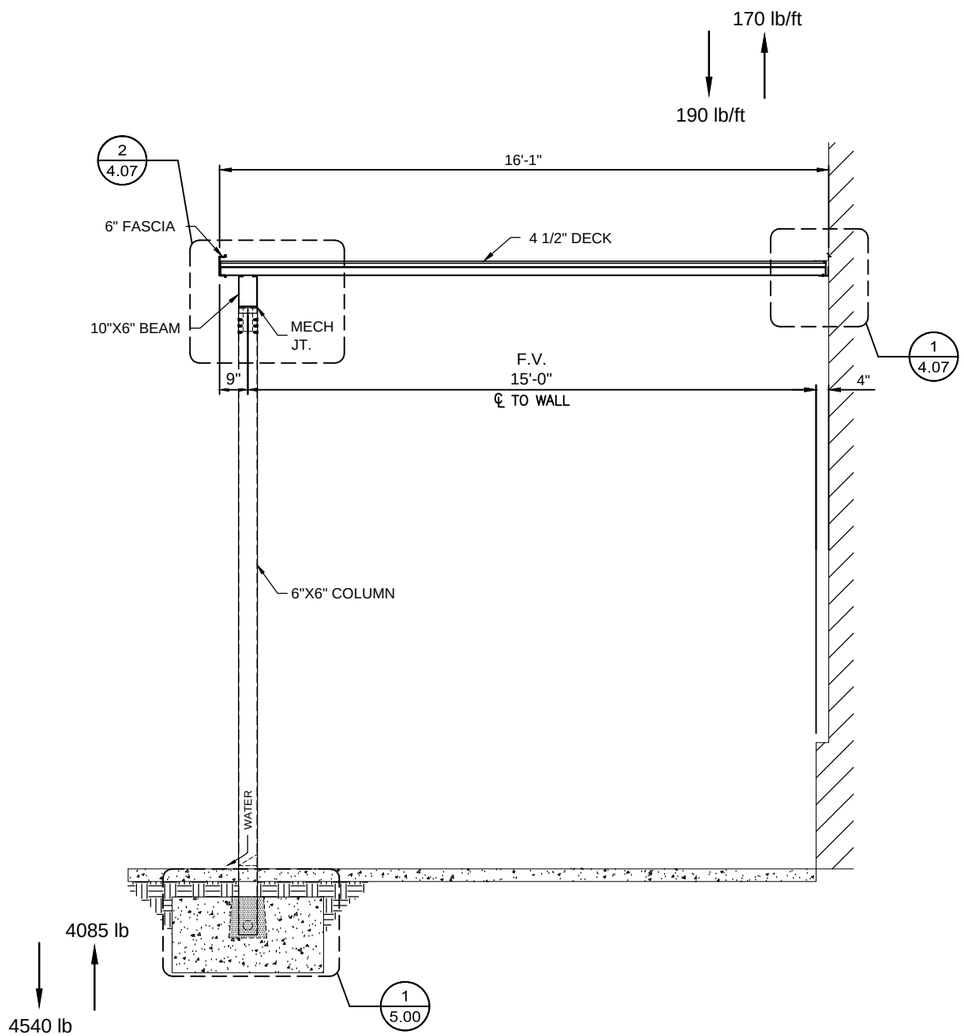

1
3.01
CANOPY SECTION
SCALE: 1/4"=1'-0" CANOPY:C
REF.: 22/A11-24, 20/A11-52 & 18/A11-52

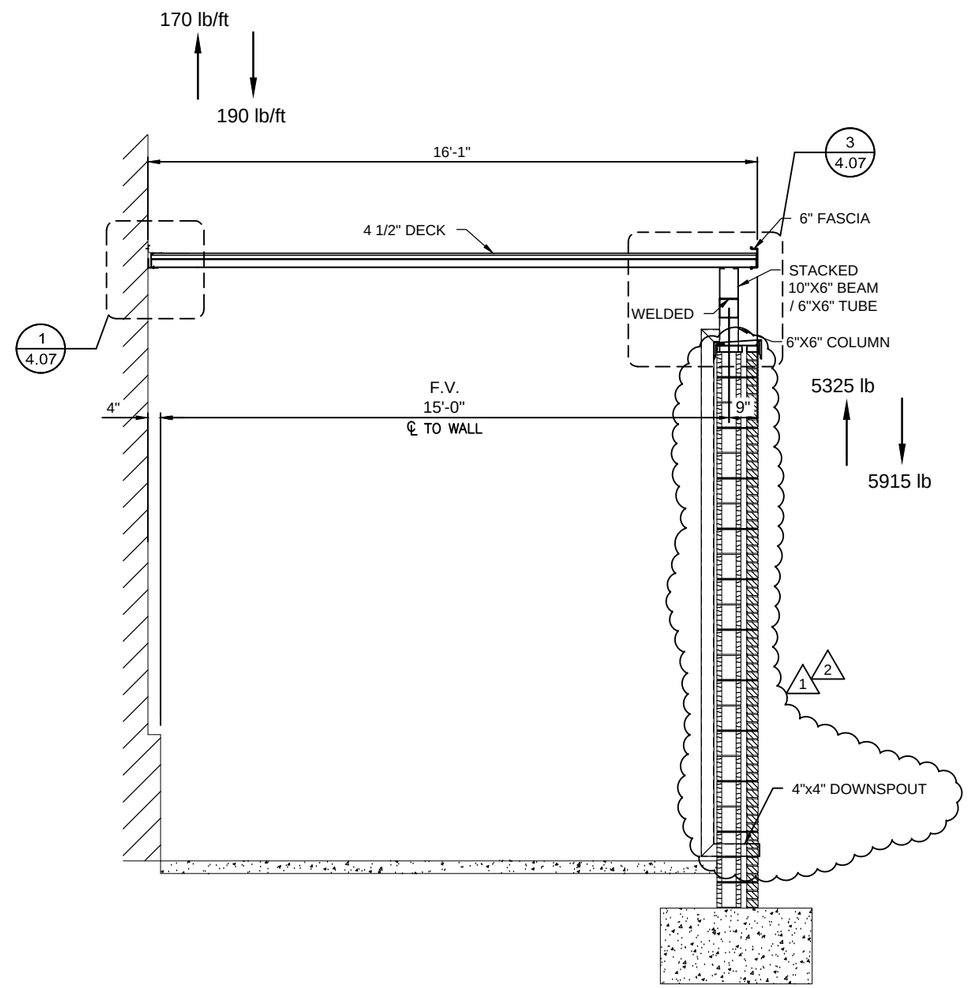

2
3.01
CANOPY SECTION
SCALE: 1/4"=1'-0" CANOPY:C
REF.: 22/A11-24, 20/A11-52 & 18/A11-52

Peachtree PROTECTIVE COVERS

REV.:	DATE	SUBJECT	DWG. BY
1	12/23/13	2ND SUBMITTAL	RH
2	1/16/14	INITIAL F&F	RH

PROJECT: UNIVERSITY HOSPITAL McDUFFIE
CUSTOMER: J.E. DUNN CONSTRUCTION
ARCHITECT: PERKINS & WILL
LOCATION: THOMSON, GA

DATE: 10/25/13
DWN. BY: RH
CHKD. BY: RW
DRAWING NO. 3.01
PPC JOB NO. 5669

SAVE: 1/16/2014
PRINT: 1/16/2014
J:\Jobs\5669 - UNIVERSITY HOSPITAL MCDUFFIE\SB-FF\5669-SBFF.dwg

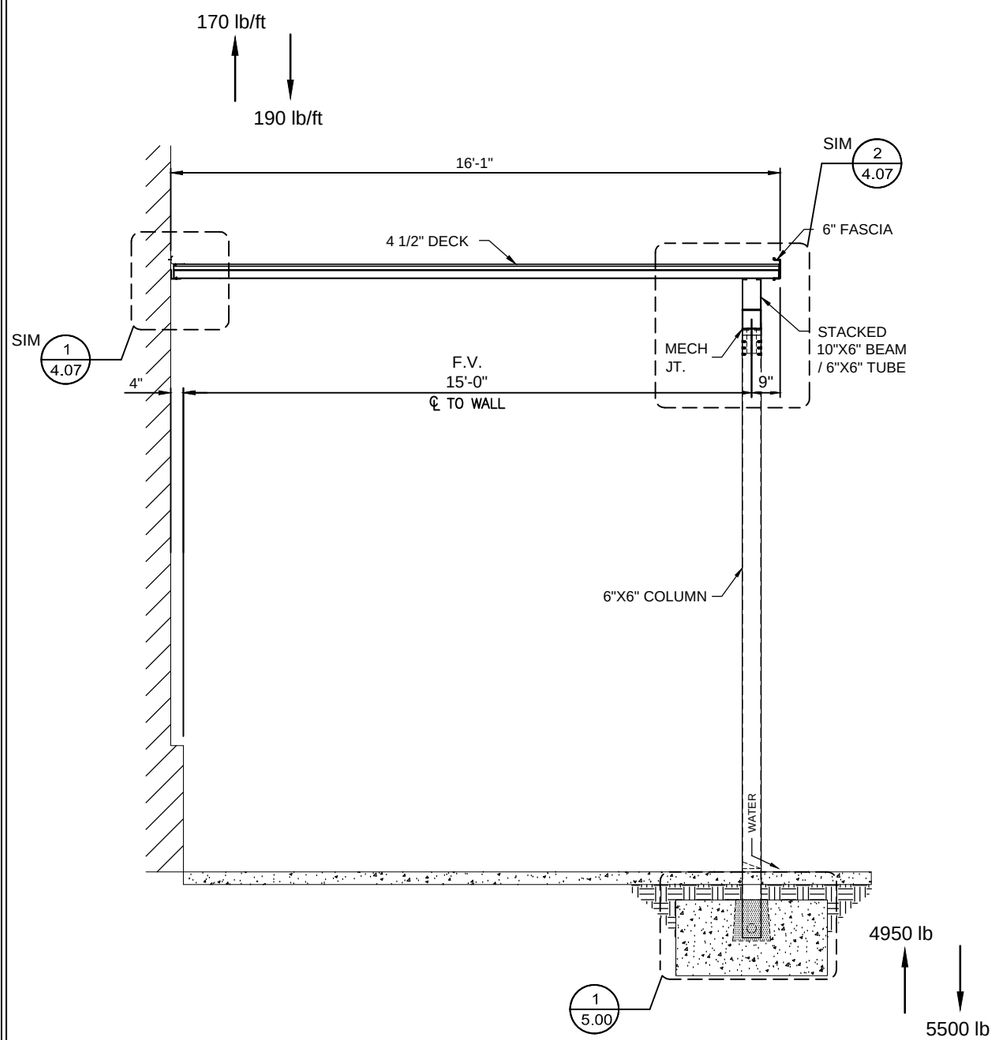

1 / 3.02 CANOPY SECTION
SCALE: 1/4"=1'-0" CANOPY:C
REF.: 22/A11-24, 20/A11-52 & 18/A11-52

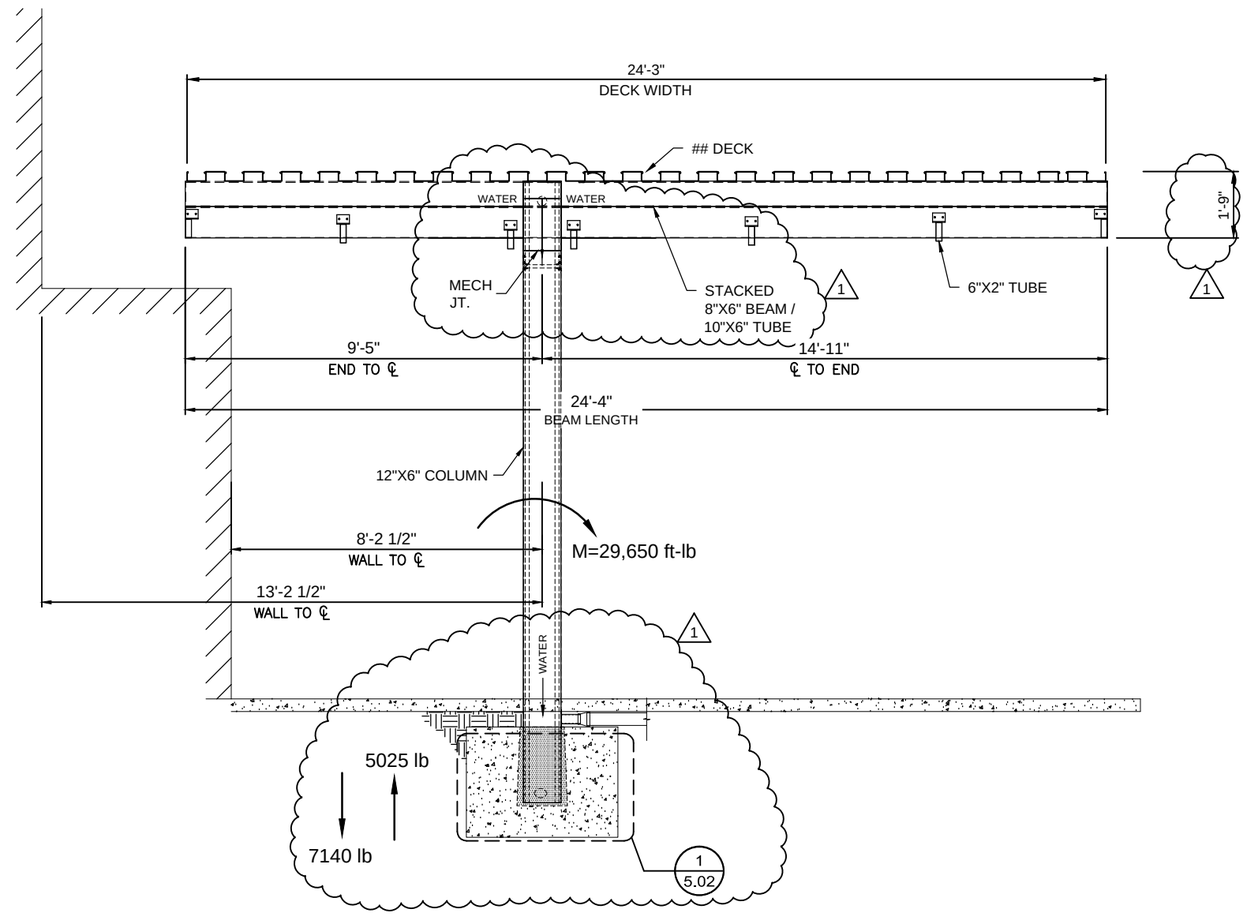

2 / 3.02 CANOPY SECTION
SCALE: 1/4"=1'-0" CANOPY:D
REF.: 3/A11-30

Peachtree PROTECTIVE COVERS

REV.:	DATE	SUBJECT	DWG. BY
1	12/23/13	2ND SUBMITTAL	RH

PROJECT: UNIVERSITY HOSPITAL McDUFFIE
CUSTOMER: J.E. DUNN CONSTRUCTION
ARCHITECT: PERKINS & WILL
LOCATION: THOMSON, GA

DATE: 10/25/13
DWN. BY: RH
CHKD. BY: RW
DRAWING NO. 3.02
PPC JOB NO. 5669

SAVE: 1/16/2014
PRINT: 1/16/2014
J:\Jobs\5669 - UNIVERSITY HOSPITAL MCDUFFIE\SB-FF\5669-SBFF.dwg

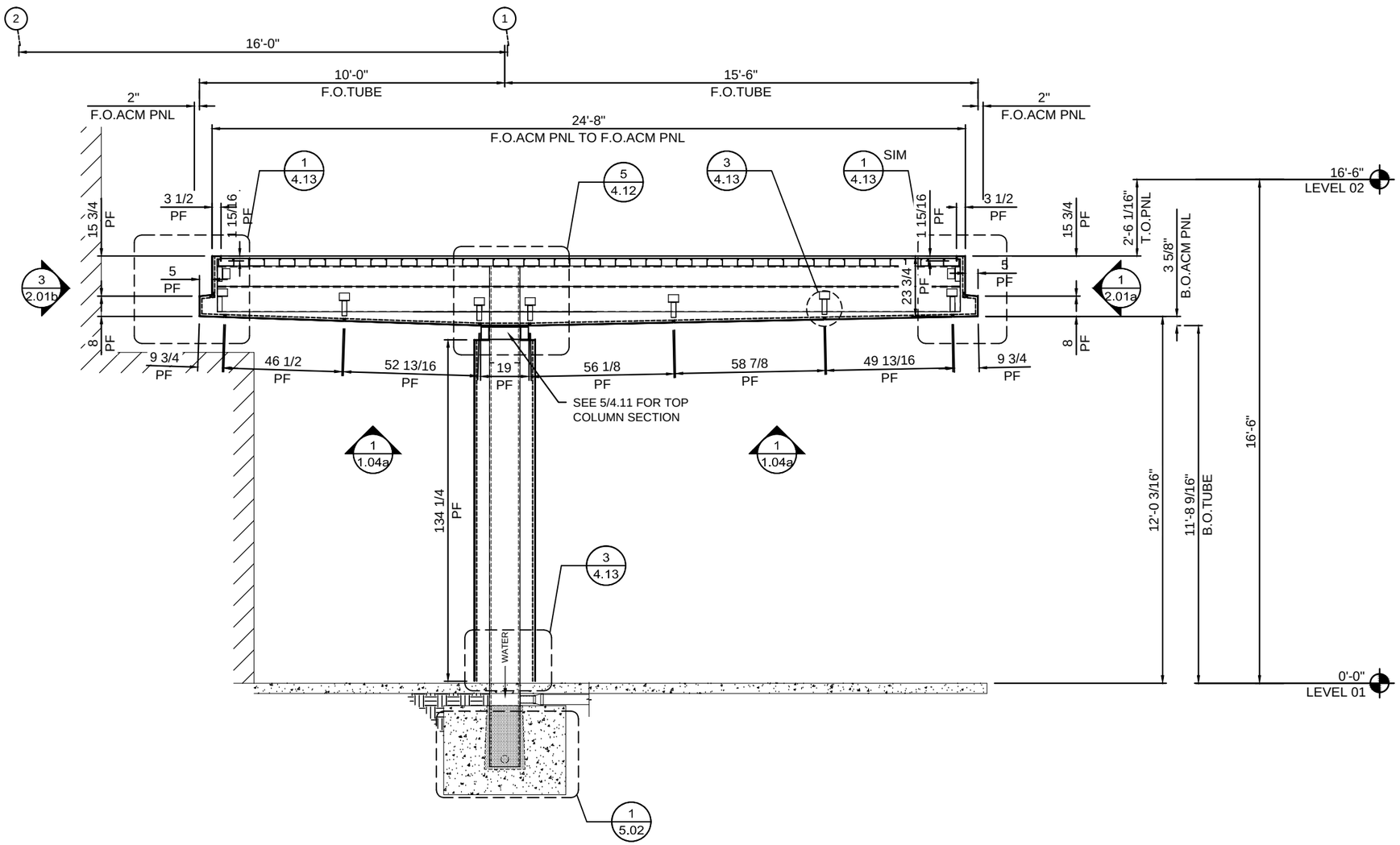

1 / 3.02a CANOPY SECTION
SCALE: 1/4"=1'-0" CANOPY:D
REF.: 3/A11-30

Peachtree PROTECTIVE COVERS

REV.:	DATE	SUBJECT	DWG. BY
1	12/23/13	2ND SUBMITTAL	RH

PROJECT: UNIVERSITY HOSPITAL McDUFFIE
CUSTOMER: J.E. DUNN CONSTRUCTION
ARCHITECT: PERKINS & WILL
LOCATION: THOMSON, GA

DATE: 10/25/13
DWN. BY: RH
CHKD. BY: RW
DRAWING NO. 3.02a
PPC JOB NO. 5669

SAVE: 1/16/2014
PRINT: 1/16/2014
J:\Jobs\5669 - UNIVERSITY HOSPITAL MCDUFFIE\SB-FF\5669-SBFF.dwg

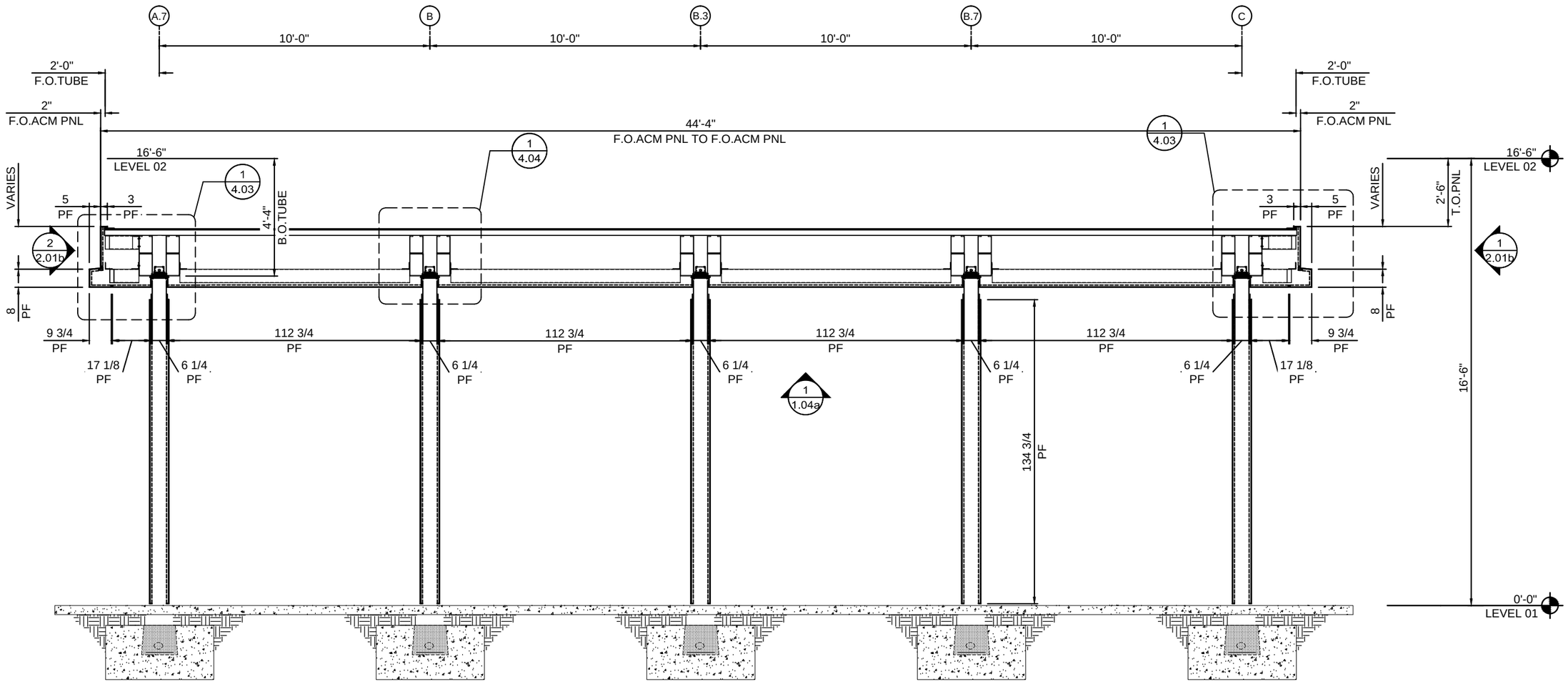

1 / 3.02b CANOPY SECTION
SCALE: 1/4"=1'-0" CANOPY:D
REF.: 3/A11-30 (SIM)

Peachtree PROTECTIVE COVERS

REV.:	DATE	SUBJECT	DWG. BY
1	12/23/13	2ND SUBMITTAL	RH

PROJECT: UNIVERSITY HOSPITAL McDUFFIE
CUSTOMER: J.E. DUNN CONSTRUCTION
ARCHITECT: PERKINS & WILL
LOCATION: THOMSON, GA

DATE: 10/25/13
DWN. BY: RH
CHKD. BY: RW
DRAWING NO. 3.02b
PPC JOB NO. 5669

SAVE: 1/14/2014
PRINT: 1/14/2014
J:\Jobs\5669 - UNIVERSITY HOSPITAL MCDUFFIE\SB-FF\5669-SBFF.dwg

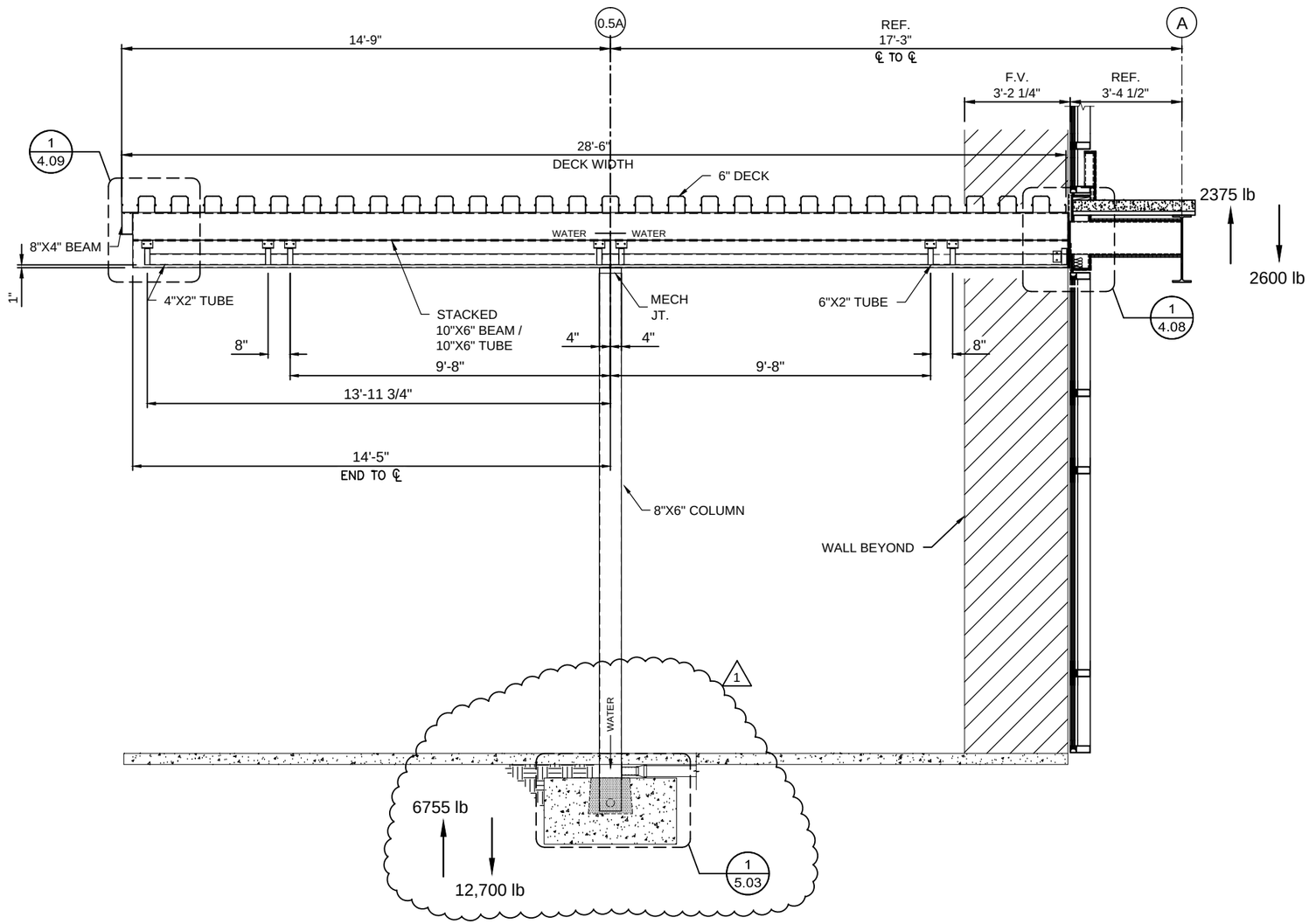

1 / 3.03 CANOPY SECTION
SCALE: 1/4"=1'-0" CANOPY:E
REF.: 10/A11-30

Peachtree PROTECTIVE COVERS

REV.:	DATE	SUBJECT	DWG. BY
1	12/23/13	2ND SUBMITTAL	RH

PROJECT: UNIVERSITY HOSPITAL McDUFFIE
CUSTOMER: J.E. DUNN CONSTRUCTION
ARCHITECT: PERKINS & WILL
LOCATION: THOMSON, GA

DATE: 10/25/13
DWN. BY: RH
CHKD. BY: RW
DRAWING NO. 3.03
PPC JOB NO. 5669

SAVE: 1/16/2014
PRINT: 1/16/2014
J:\Jobs\5669 - UNIVERSITY HOSPITAL MCDUFFIE\SB-FF\5669-SBFF.dwg

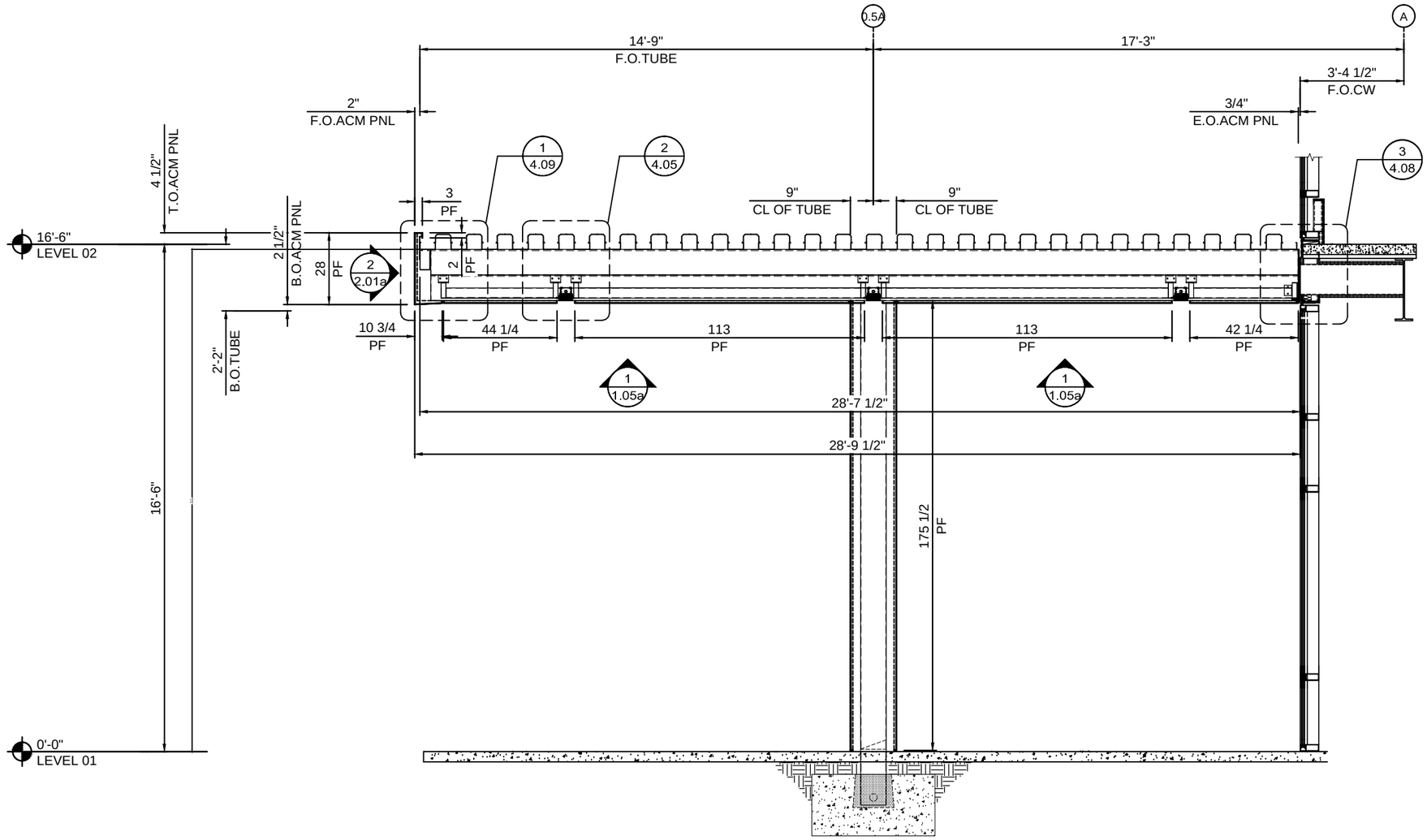

1
3.03a

CANOPY SECTION

SCALE: 1/4"=1'-0" CANOPY:E
REF.: 10/A11.30, 13/A11.30, 11/A11.52

Peachtree PROTECTIVE COVERS

REV.:	DATE	SUBJECT	DWG. BY
1	12/23/13	2ND SUBMITTAL	RH

PROJECT: UNIVERSITY HOSPITAL McDUFFIE

CUSTOMER: J.E. DUNN CONSTRUCTION

ARCHITECT: PERKINS & WILL

LOCATION: THOMSON, GA

DATE: 10/25/13

DWN. BY: RH

CHKD. BY: RW

DRAWING NO. 3.03a

PPC JOB NO. 5669

SAVE: 1/14/2014

PRINT: 1/14/2014

J:\Jobs\5669 - UNIVERSITY HOSPITAL MCDUFFIE\SB-FF\5669-SBFF.dwg

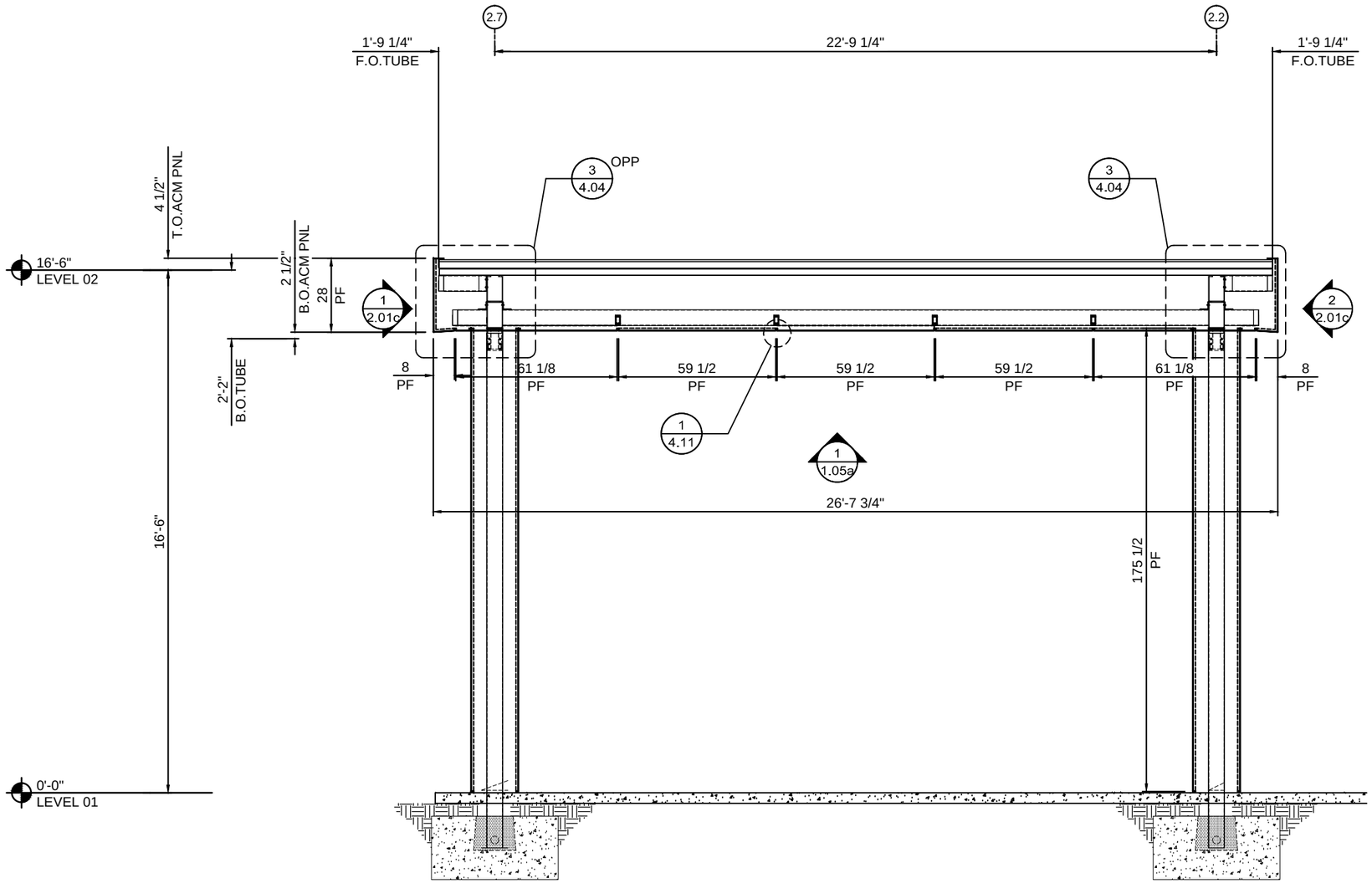

1 / 3.03b CANOPY SECTION
SCALE: 1/4"=1'-0" CANOPY:E
REF.: 10/A11.30 (SIM)

Peachtree PROTECTIVE COVERS

REV.:	DATE	SUBJECT	DWG. BY
1	12/23/13	2ND SUBMITTAL	RH

PROJECT: UNIVERSITY HOSPITAL McDUFFIE
CUSTOMER: J.E. DUNN CONSTRUCTION
ARCHITECT: PERKINS & WILL
LOCATION: THOMSON, GA

DATE: 10/25/13
DWN. BY: RH
CHKD. BY: RW
DRAWING NO. 3.03b
PPC JOB NO. 5669

SAVE: 1/14/2014
PRINT: 1/14/2014
J:\Jobs\5669 - UNIVERSITY HOSPITAL MCDUFFIE\SB-FF\5669-SBFF.dwg

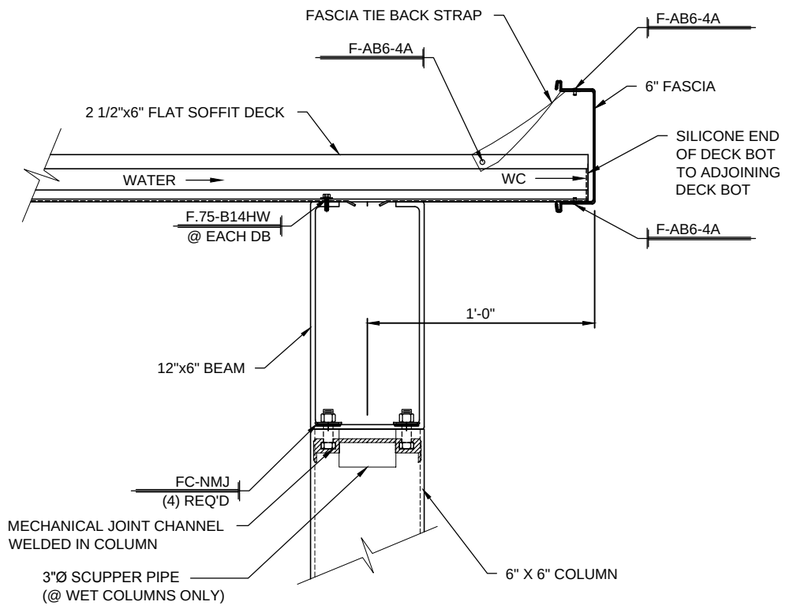

1 / 4.00 CANOPY END SECTION
SCALE: 1 1/2"=1'-0" CANOPY: A
REF.:

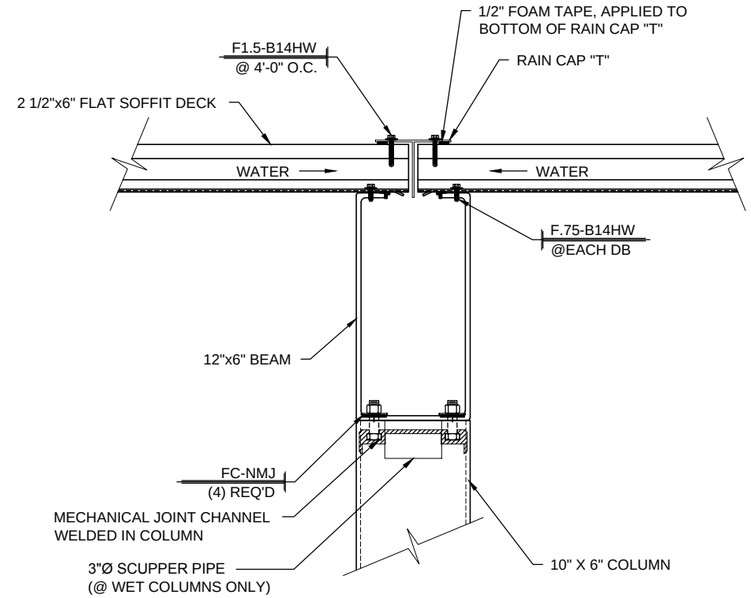

2 / 4.00 BAY BREAK SECTION
SCALE: 1 1/2"=1'-0" CANOPY: A
REF.:

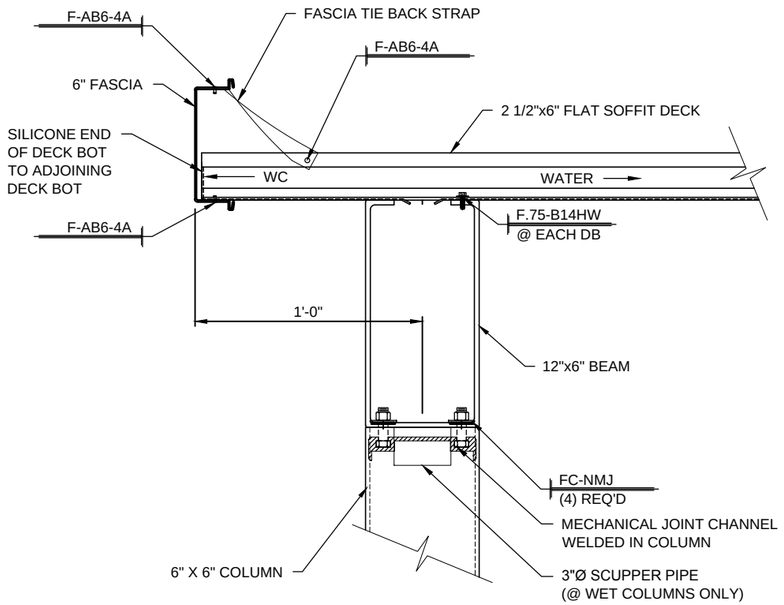

3 / 4.00 CANOPY END SECTION
SCALE: 1 1/2"=1'-0" CANOPY: A
REF.:

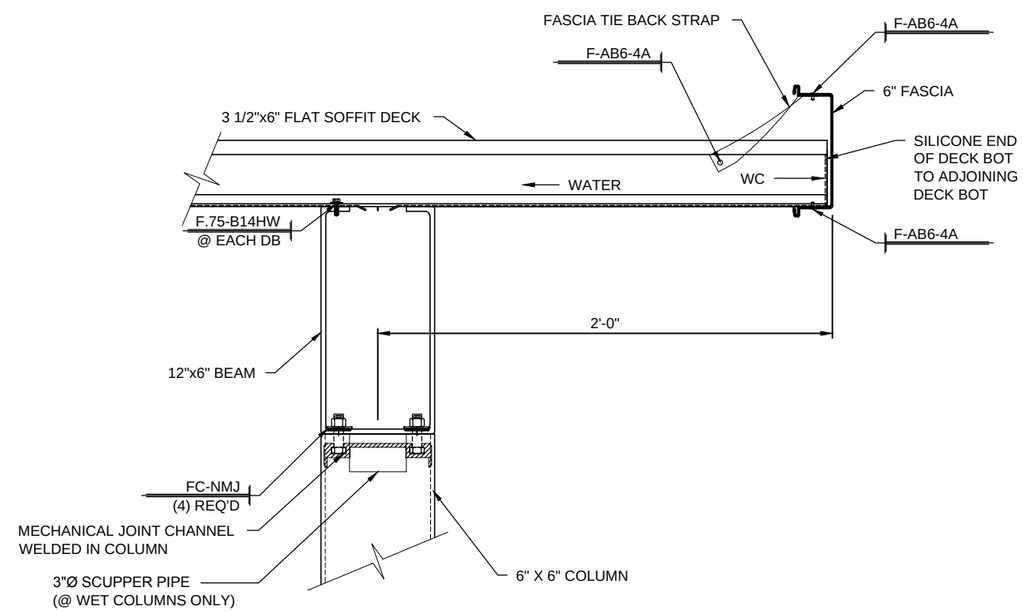

4 / 4.00 CANOPY END SECTION
SCALE: 1 1/2"=1'-0" CANOPY: B
REF.:

Peachtree PROTECTIVE COVERS

REV.:	DATE	SUBJECT	DWG. BY

PROJECT: UNIVERSITY HOSPITAL McDUFFIE
CUSTOMER: J.E. DUNN CONSTRUCTION
ARCHITECT: PERKINS & WILL
LOCATION: THOMSON, GA

DATE: 10/25/13
DWN. BY: RH
CHKD. BY: RW
DRAWING NO. 4.00
PPC JOB NO. 5669

PRINT: 1/19/2014 SAVE:1/14/2014
J:\Jobs\5669 - UNIVERSITY HOSPITAL MCDUFFIE\SB-FF\5669-SBFF.dwg

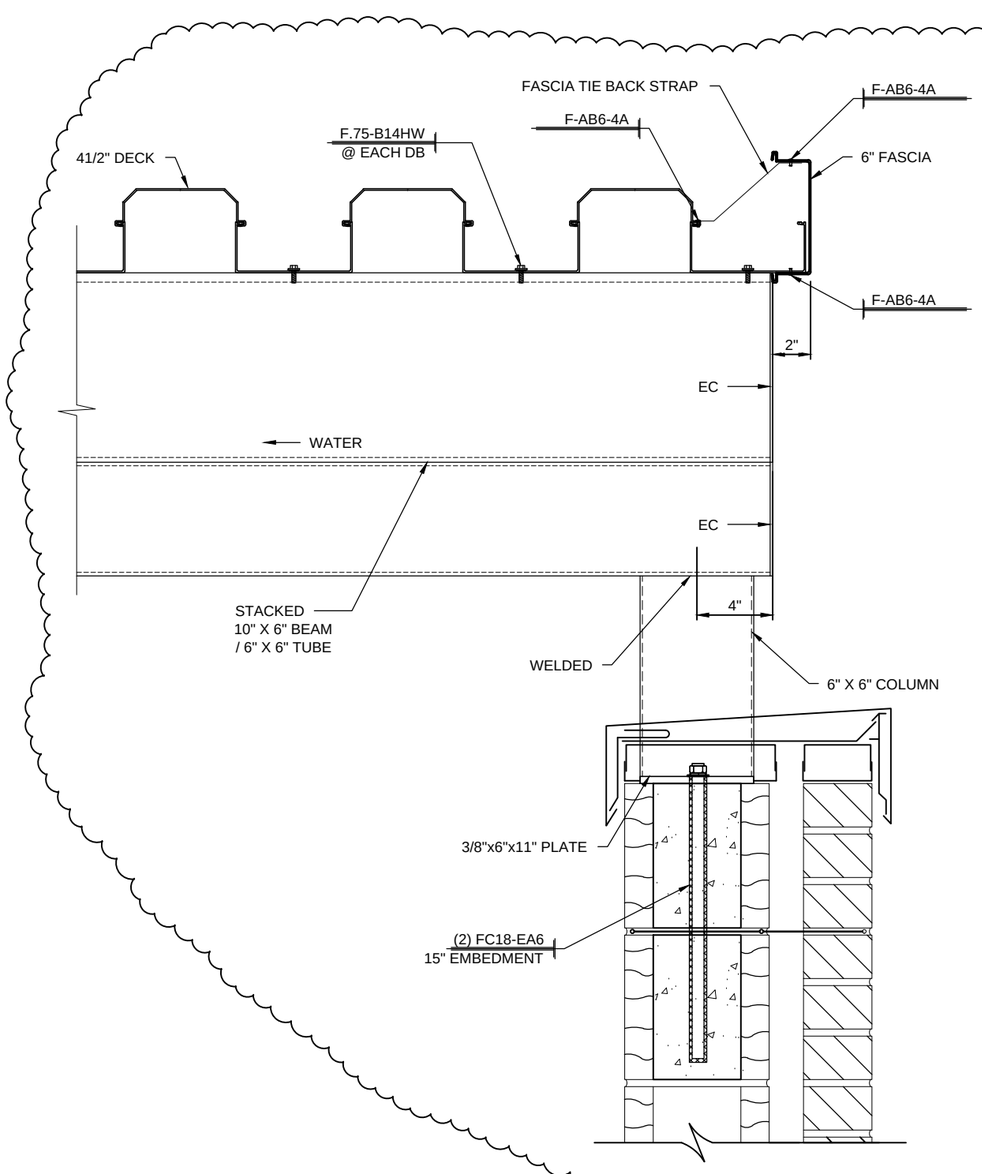

1 4.01 CANOPY MECH. JT.
SCALE: 1 1/2"=1'-0" CANOPY: C
REF.:

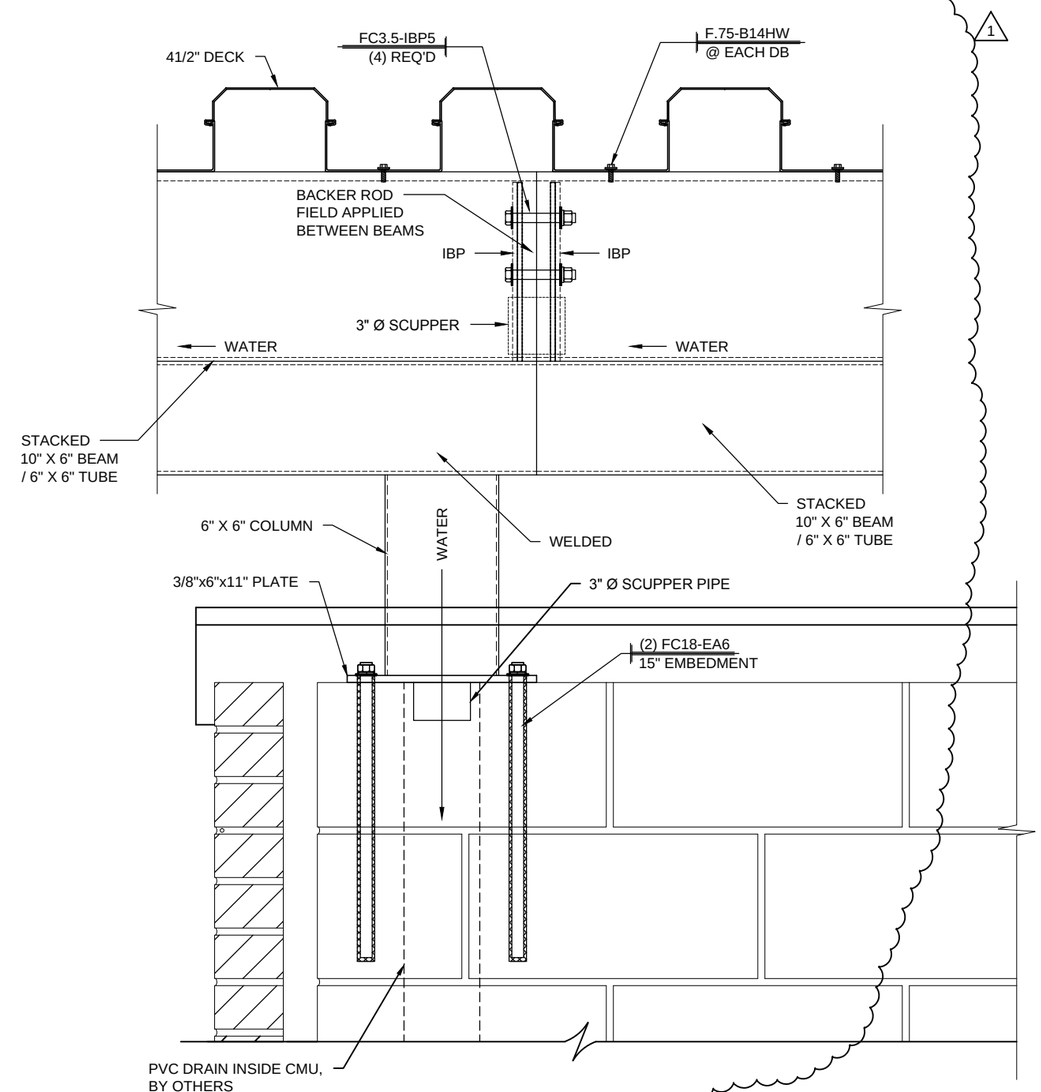

2 4.01 CANOPY BEAM CONN.
SCALE: 1 1/2"=1'-0" CANOPY: C
REF.:

Peachtree PROTECTIVE COVERS

REV.:	DATE	SUBJECT	DWG. BY
1	12/23/13	2ND SUBMITTAL	RH

PROJECT: UNIVERSITY HOSPITAL McDUFFIE
CUSTOMER: J.E. DUNN CONSTRUCTION
ARCHITECT: PERKINS & WILL
LOCATION: THOMSON, GA

DATE: 10/25/13
DWN. BY: RH
CHKD. BY: RW
DRAWING NO. 4.01
PPC JOB NO. 5669

SAVE: 1/14/2014
PRINT: 1/14/2014
J:\Jobs\5669 - UNIVERSITY HOSPITAL MCDUFFIE\SB-FF\5669-SBFF.dwg

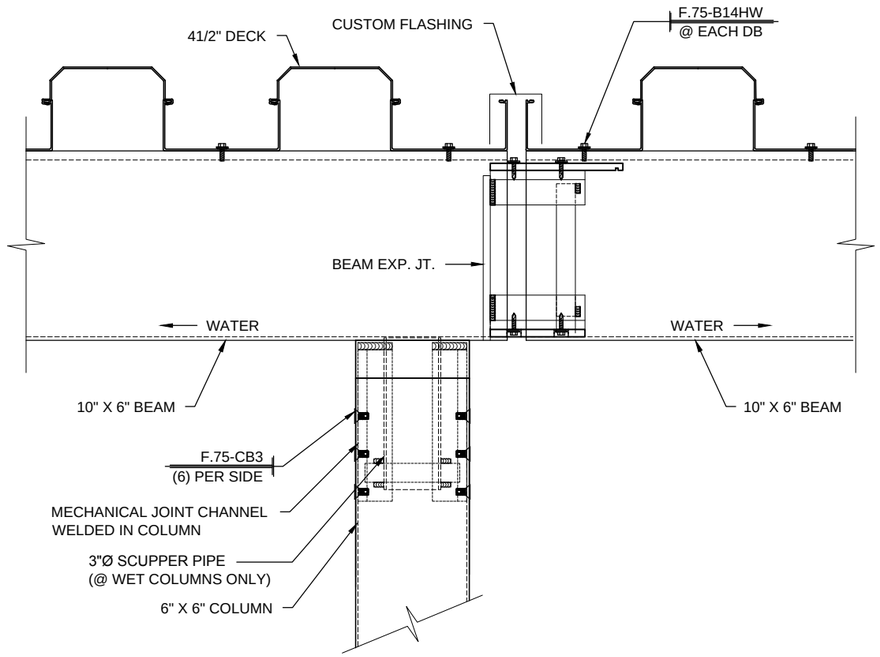

1 / 4.02 CANOPY BEAM EXP. JT.
SCALE: 1 1/2"=1'-0" CANOPY: C
REF.:

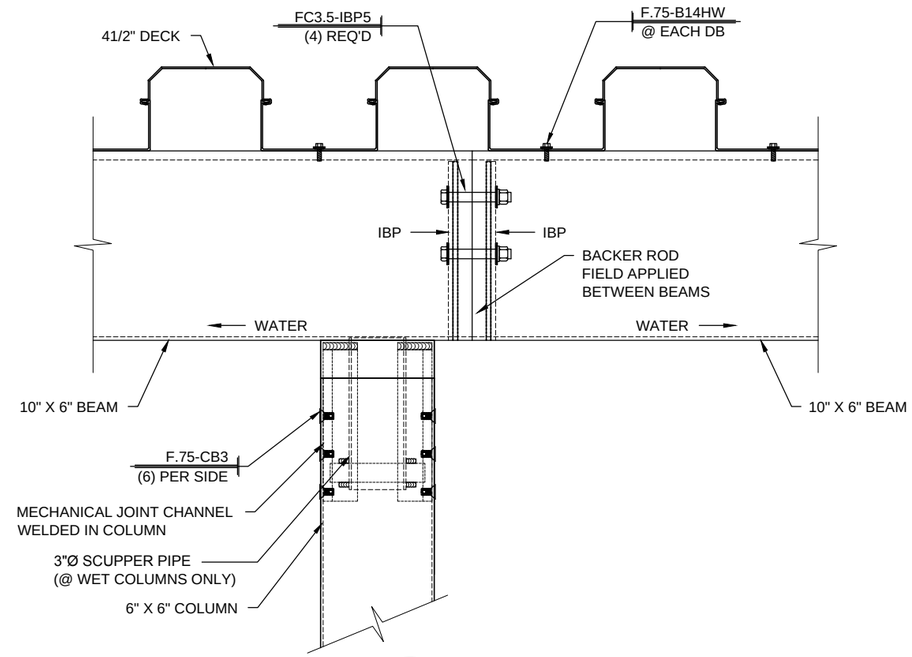

2 / 4.02 CANOPY BEAM CONN.
SCALE: 1 1/2"=1'-0" CANOPY: C
REF.:

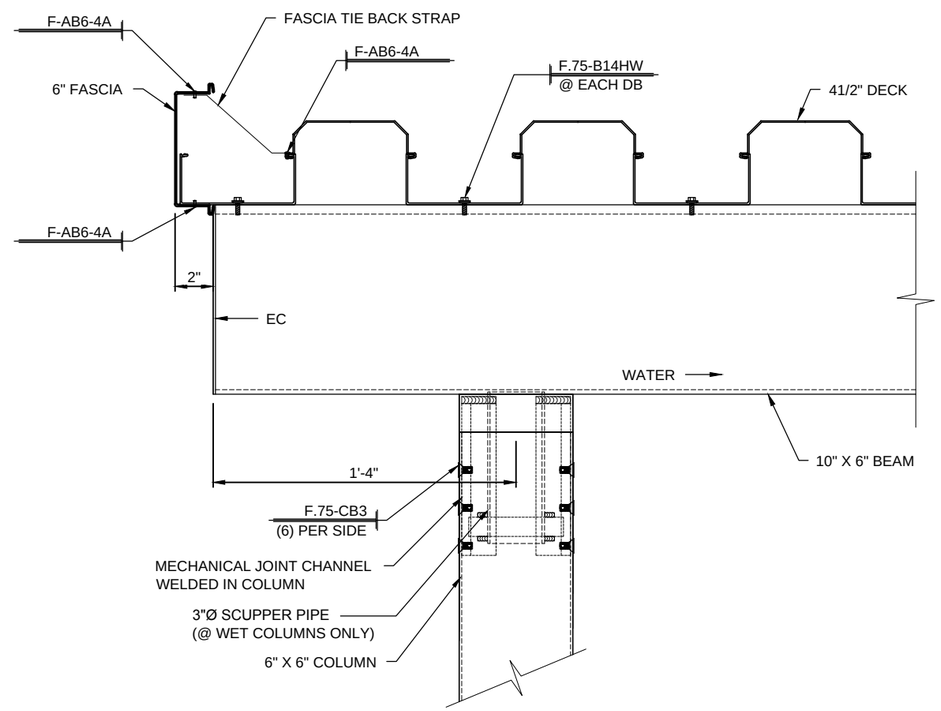

3 / 4.02 CANOPY MECH. JT.
SCALE: 1 1/2"=1'-0" CANOPY: C
REF.:

Peachtree PROTECTIVE COVERS

REV.:	DATE	SUBJECT	DWG. BY

PROJECT: UNIVERSITY HOSPITAL McDUFFIE
CUSTOMER: J.E. DUNN CONSTRUCTION
ARCHITECT: PERKINS & WILL
LOCATION: THOMSON, GA

DATE: 10/25/13
DWN. BY: RH
CHKD. BY: RW
DRAWING NO. 4.02
PPC JOB NO. 5669

SAVE: 1/16/2014
PRINT: 1/16/2014
J:\Jobs\5669 - UNIVERSITY HOSPITAL MCDUFFIE\SB-FF\5669-SBFF.dwg

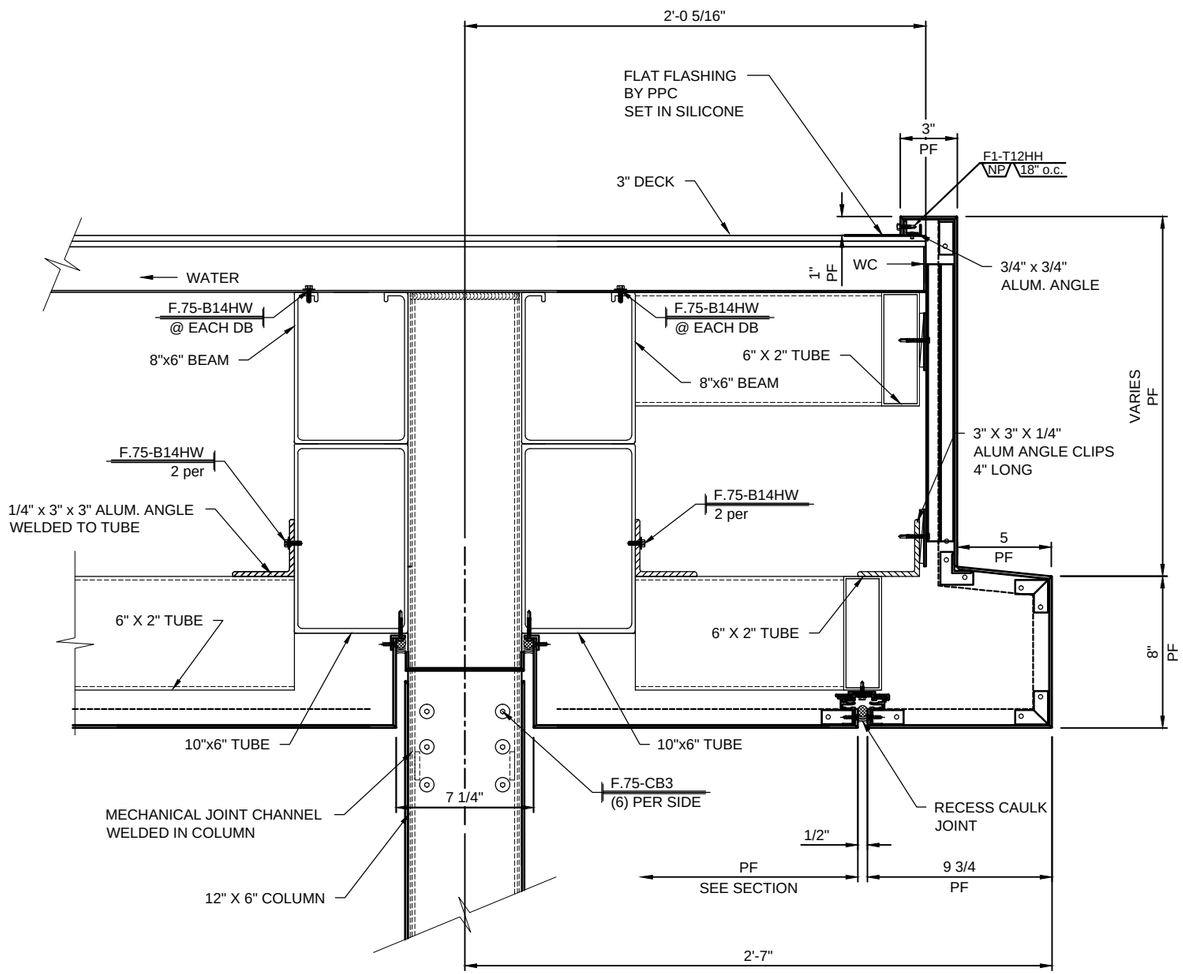

1 / 4.03 CANOPY END SECTION
SCALE: 1 1/2"=1'-0" CANOPY: D
REF.:

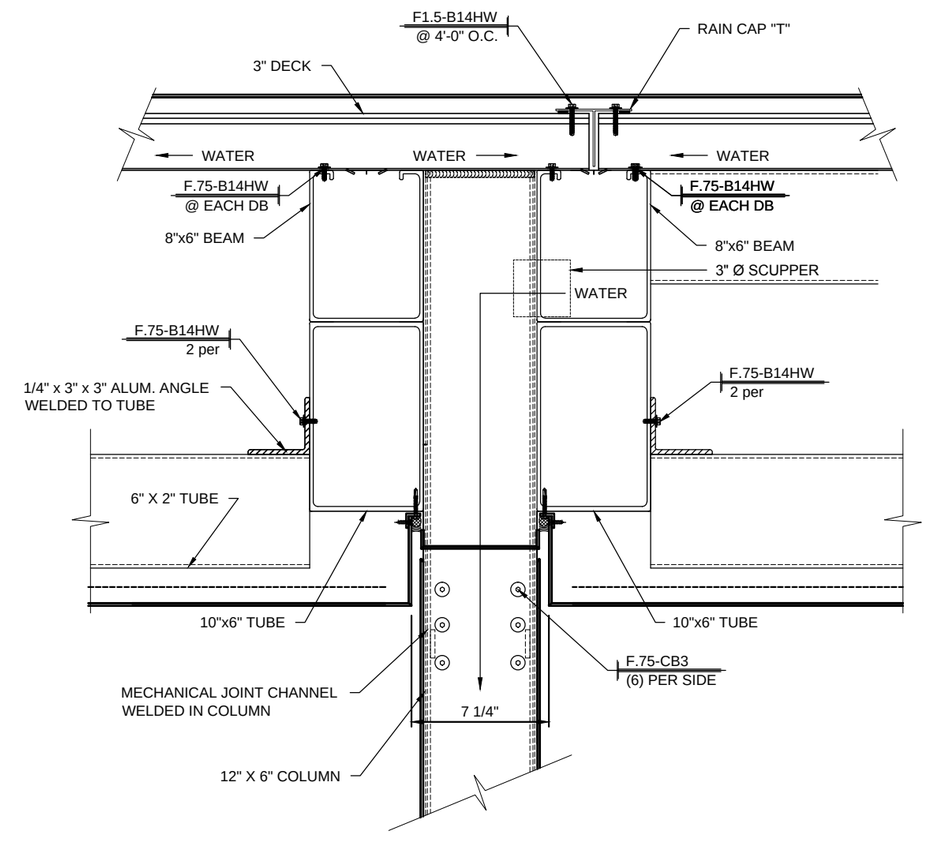

2 / 4.03 CANOPY BAY BREAK
SCALE: 1 1/2"=1'-0" CANOPY: D
REF.:

1

Peachtree PROTECTIVE COVERS

REV.:	DATE	SUBJECT	DWG. BY
1	12/23/13	2ND SUBMITTAL	KR

PROJECT: UNIVERSITY HOSPITAL McDUFFIE
CUSTOMER: J.E. DUNN CONSTRUCTION
ARCHITECT: PERKINS & WILL
LOCATION: THOMSON, GA

DATE: 10/25/13
DWN. BY: RH
CHKD. BY: RW
DRAWING NO. 4.03
PPC JOB NO. 5669

SAVE: 1/16/2014
PRINT: 1/16/2014
J:\Jobs\5669 - UNIVERSITY HOSPITAL MCDUFFIE\SB-FF\5669-SBFF.dwg

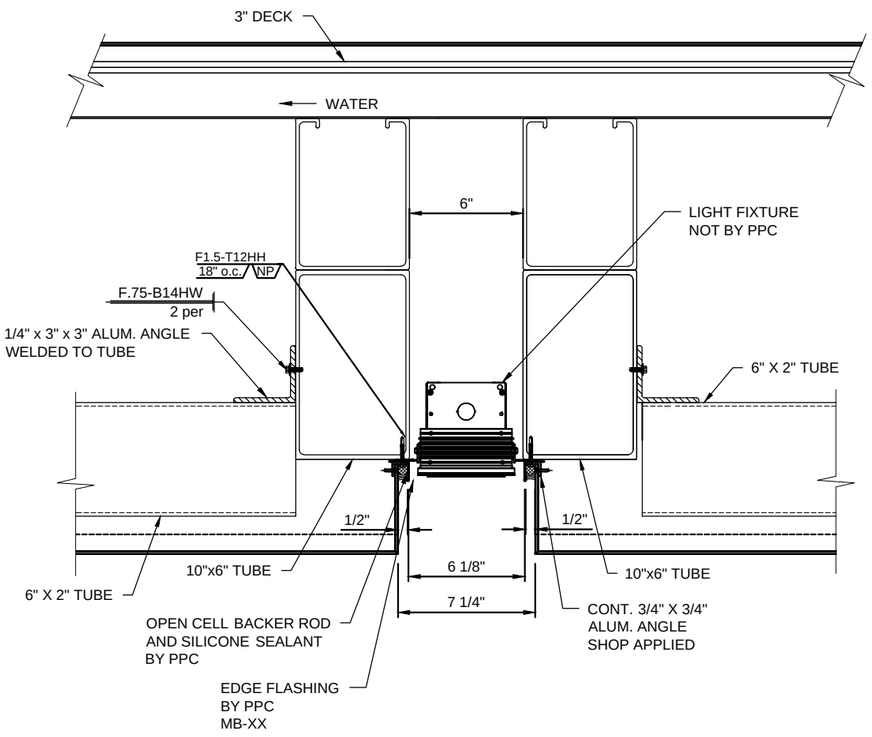

1 / 4.04 CANOPY LIGHTING SECTION
SCALE: 1 1/2"=1'-0" CANOPY: D
REF.:

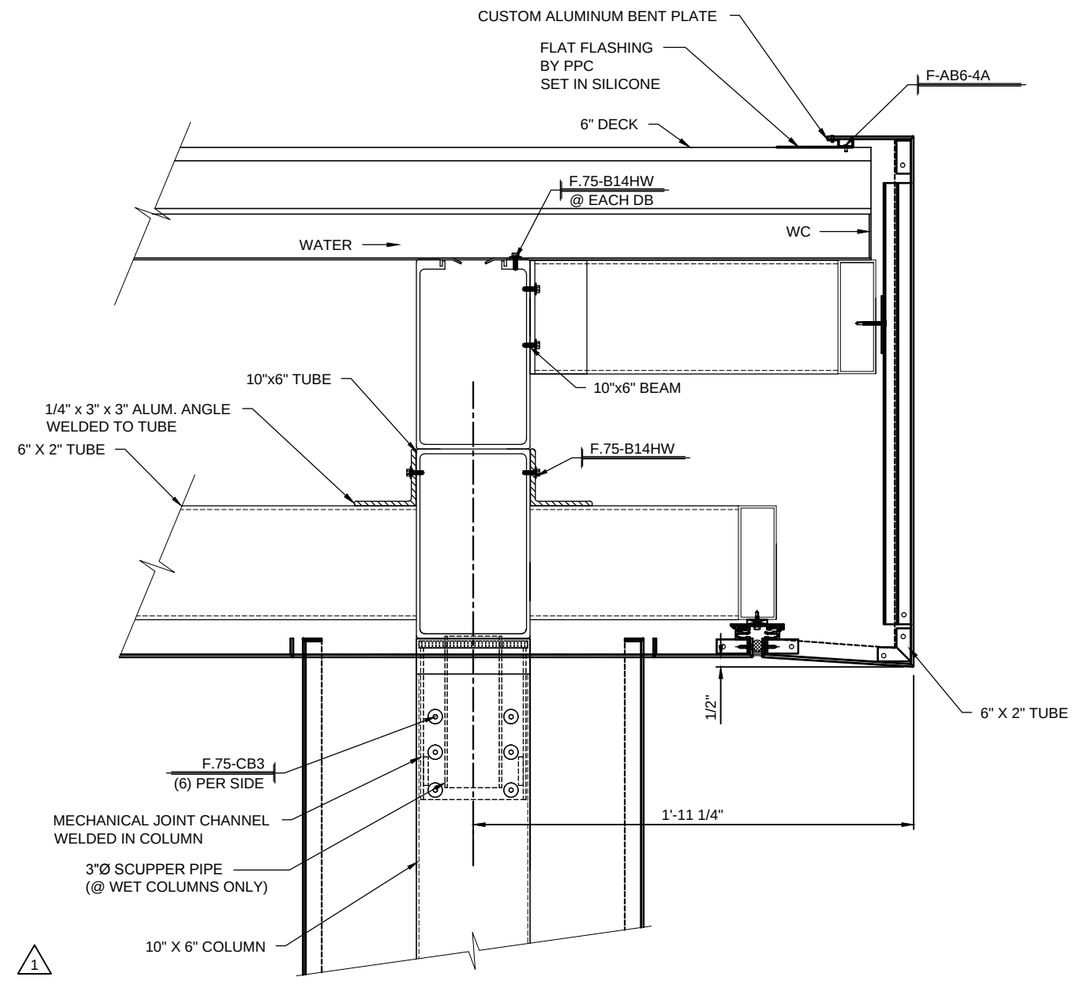

2 / 4.04 CANOPY END SECTION
SCALE: 1 1/2"=1'-0" CANOPY: E
REF.:

Peachtree PROTECTIVE COVERS

REV.:	DATE	SUBJECT	DWG. BY
1	12/23/13	2ND SUBMITTAL	KR

PROJECT: UNIVERSITY HOSPITAL McDUFFIE
CUSTOMER: J.E. DUNN CONSTRUCTION
ARCHITECT: PERKINS & WILL
LOCATION: THOMSON, GA

DATE: 10/25/13
DWN. BY: RH
CHKD. BY: RW
DRAWING NO. 4.04
PPC JOB NO. 5669

SAVE: 1/16/2014
PRINT: 1/16/2014
J:\Jobs\5669 - UNIVERSITY HOSPITAL MCDUFFIE\SB-FF\5669-SBFF.dwg

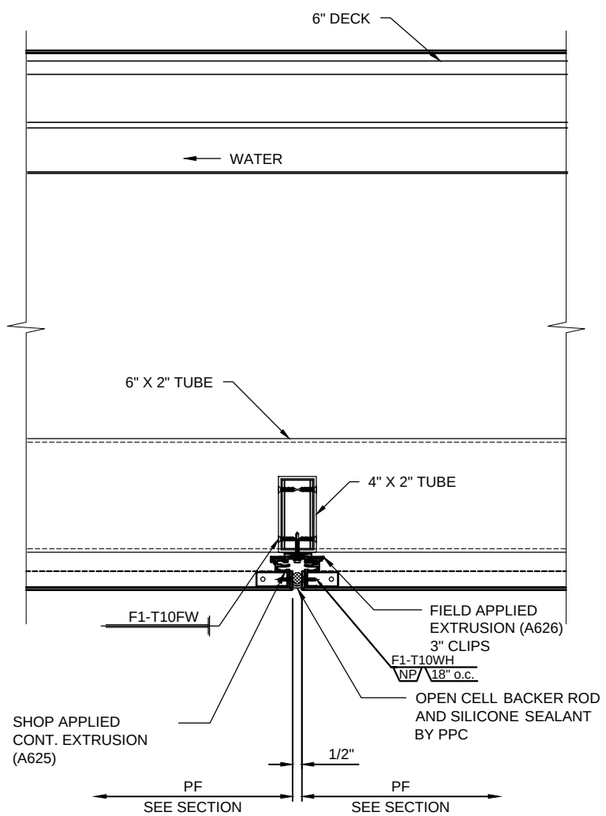

1 / 4.05 CANOPY TUBE CONNECTION
SCALE: 1 1/2"=1'-0" CANOPY: E
REF.:

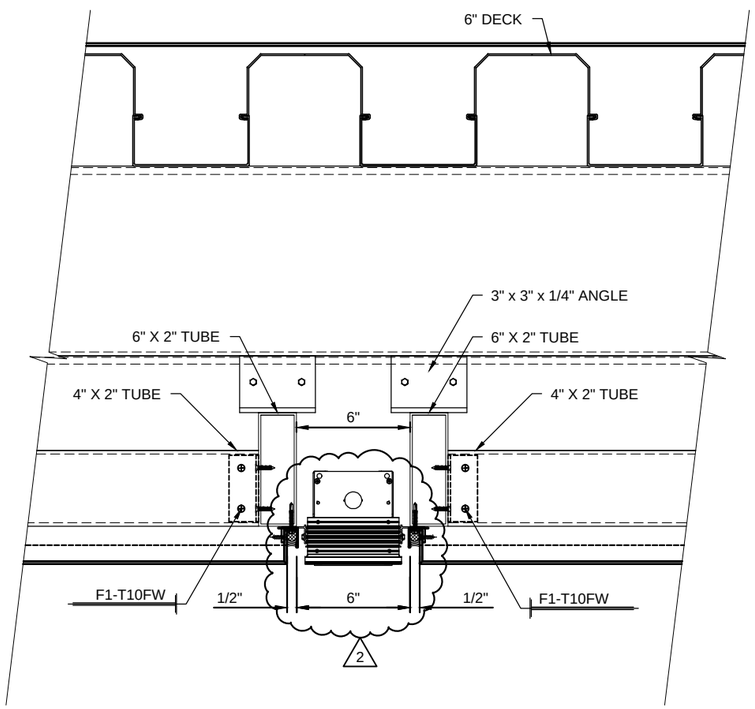

2 / 4.05 CANOPY LIGHTING SECTION
SCALE: 1 1/2"=1'-0" CANOPY: E
REF.:

1

Peachtree PROTECTIVE COVERS

REV.:	DATE	SUBJECT	DWG. BY
1	12/23/13	2ND SUBMITTAL	KR
2	1/16/14	INITIAL F&F	RH

PROJECT: UNIVERSITY HOSPITAL McDUFFIE
CUSTOMER: J.E. DUNN CONSTRUCTION
ARCHITECT: PERKINS & WILL
LOCATION: THOMSON, GA

DATE: 10/25/13
DWN. BY: RH
CHKD. BY: RW
DRAWING NO. 4.05
PPC JOB NO. 5669

SAVE: 1/16/2014
PRINT: 1/16/2014
J:\Jobs\5669 - UNIVERSITY HOSPITAL MCDUFFIE\SB-FF\5669-SBFF.dwg

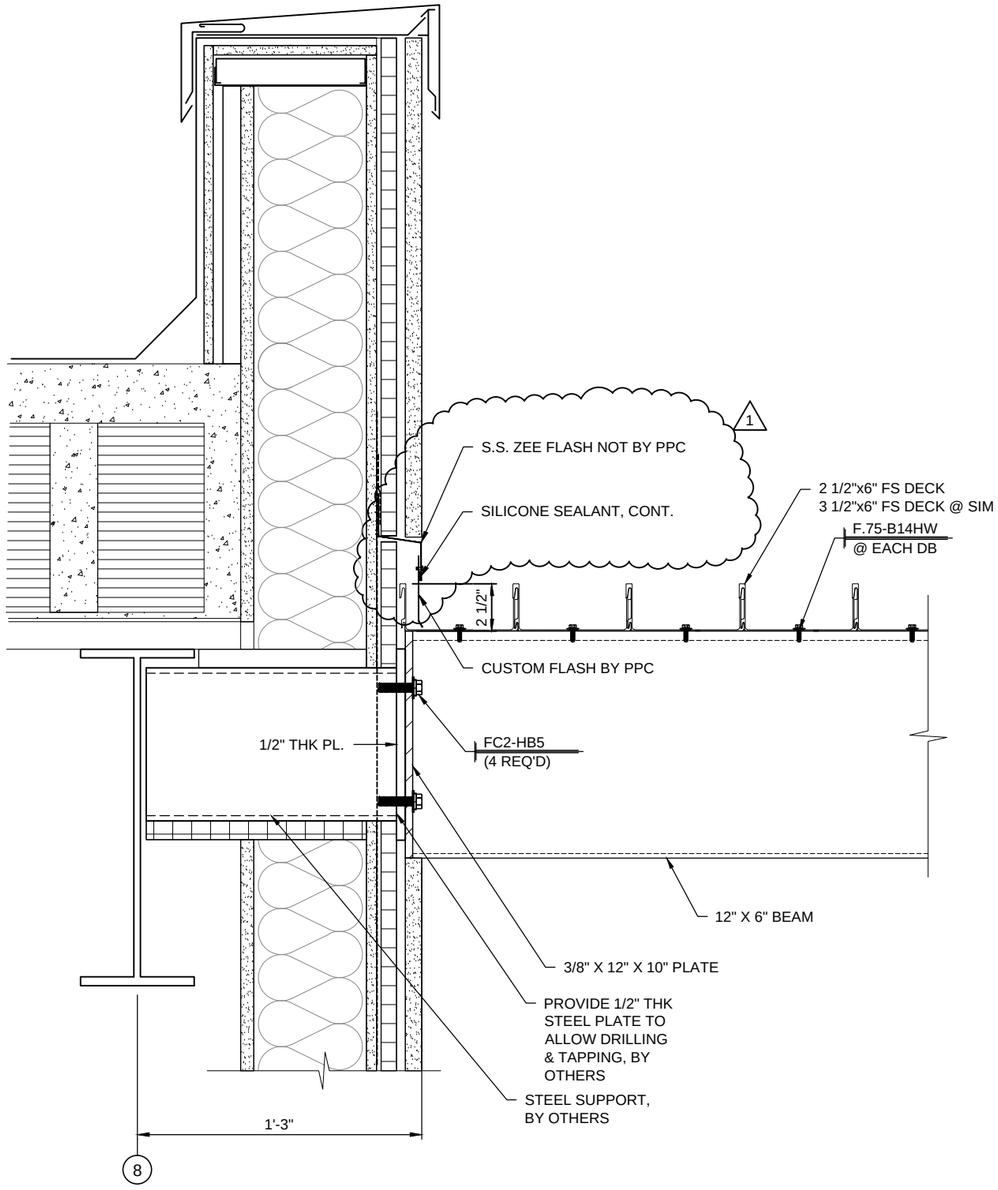

1 / 4.06 WALL CONNECTION DETAIL
SCALE: 1 1/2"=1'-0" CANOPIES: A & B
REF.: 17/A11.52

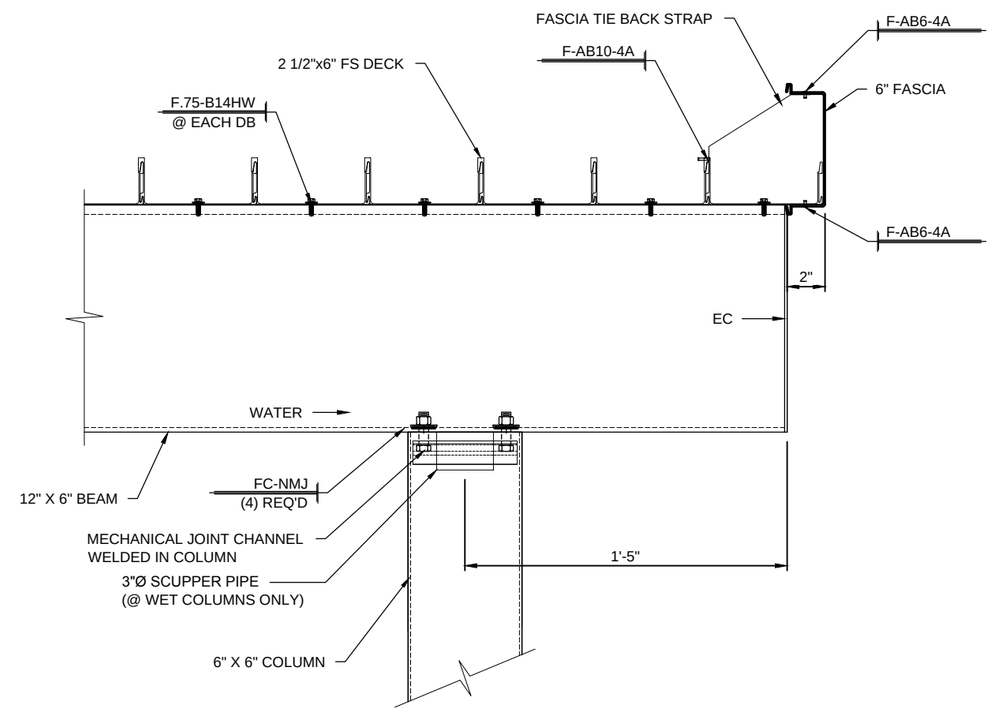

2 / 4.06 MECH. JOINT DETAIL
SCALE: 1 1/2"=1'-0" CANOPY: A
REF.:

Peachtree PROTECTIVE COVERS

REV.:	DATE	SUBJECT	DWG. BY
1	12/23/13	2ND SUBNITTAL	RH

PROJECT: UNIVERSITY HOSPITAL McDUFFIE
CUSTOMER: J.E. DUNN CONSTRUCTION
ARCHITECT: PERKINS & WILL
LOCATION: THOMSON, GA

DATE: 10/25/13
DWN. BY: RH
CHKD. BY: RW
DRAWING NO. 4.06
PPC JOB NO. 5669

SAVE: 1/16/2014
PRINT: 1/16/2014
J:\Jobs\5669 - UNIVERSITY HOSPITAL MCDUFFIE\SB-FF\5669-SBFF.dwg

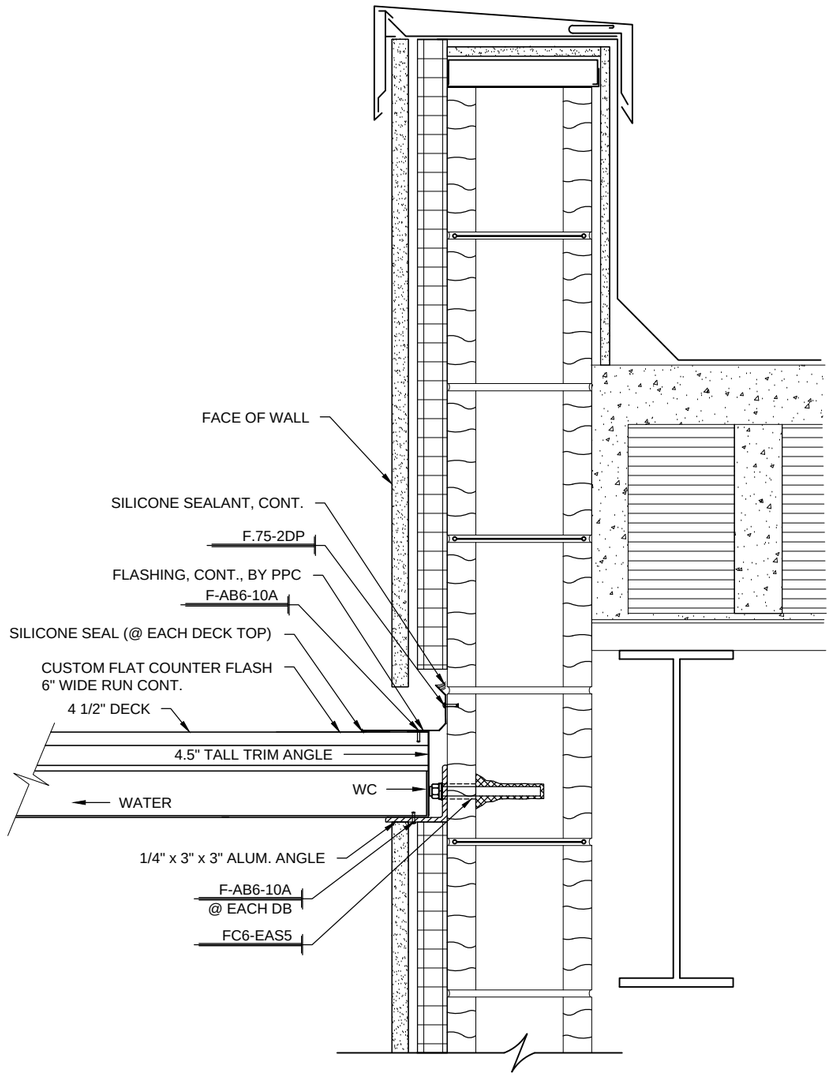

1 / 4.07 WALL CONNECTION DETAIL
SCALE: 1 1/2"=1'-0" CANOPY: C
REF.: 19/A11.52

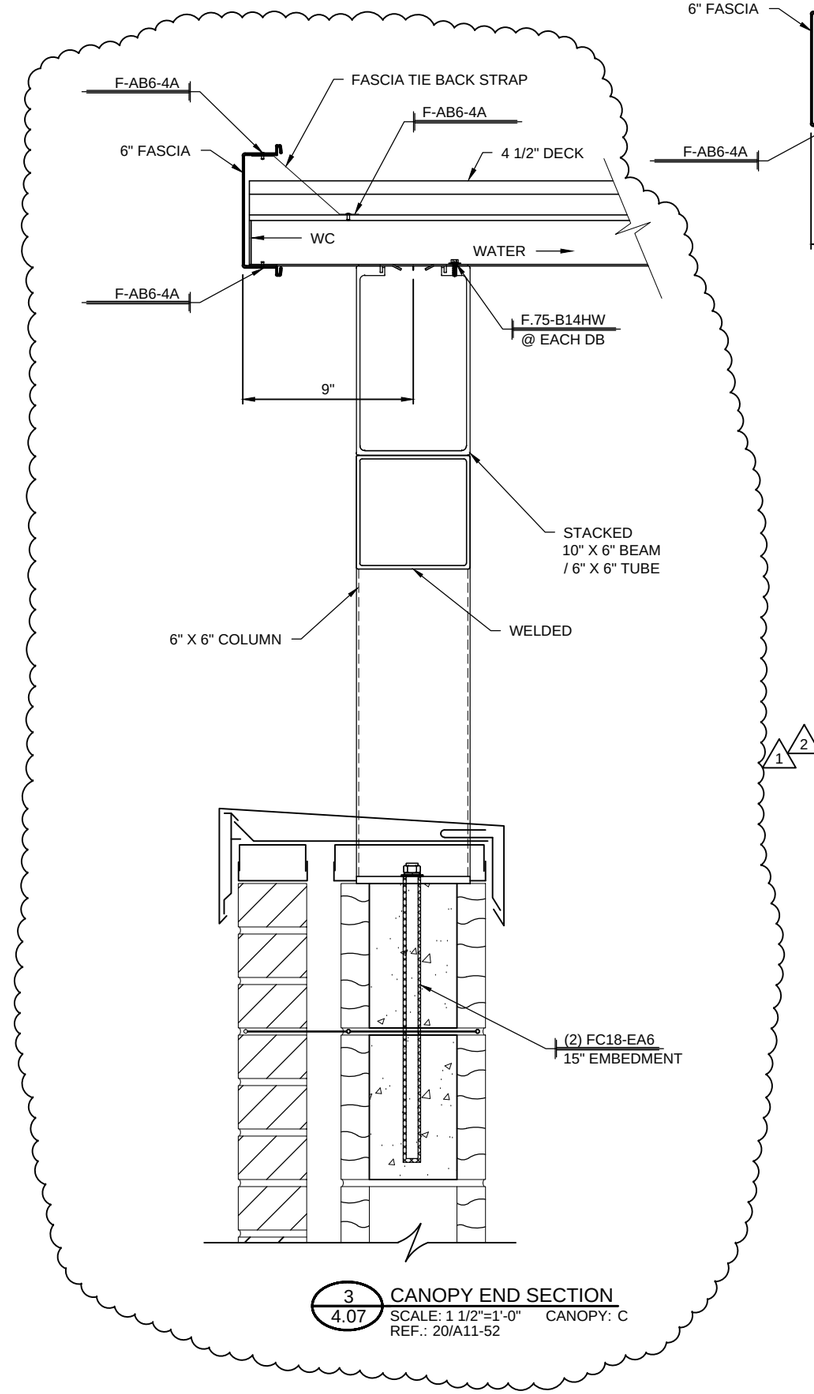

3 / 4.07 CANOPY END SECTION
SCALE: 1 1/2"=1'-0" CANOPY: C
REF.: 20/A11-52

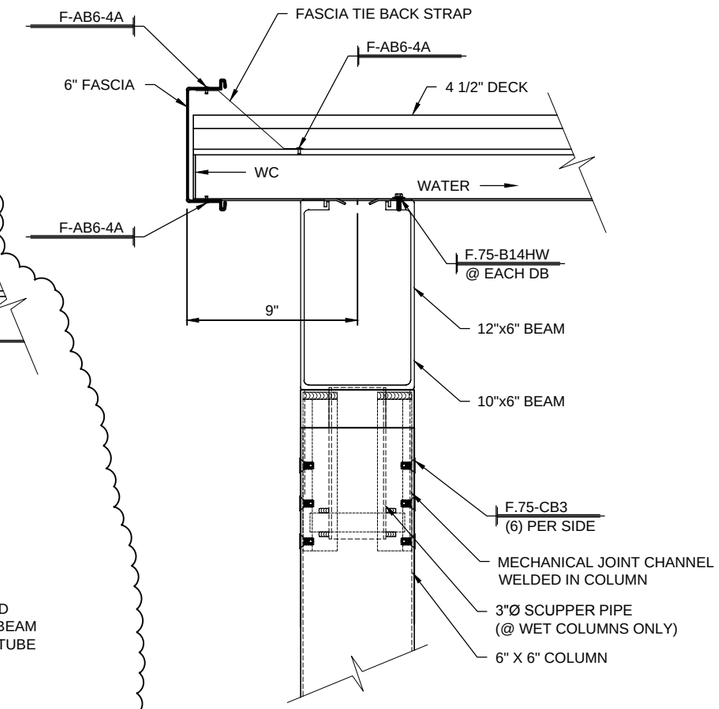

2 / 4.07 CANOPY END SECTION
SCALE: 1 1/2"=1'-0" CANOPY: C
REF.:

Peachtree PROTECTIVE COVERS

REV.:	DATE	SUBJECT	DWG. BY
1	12/23/13	2ND SUBMITTAL	RH
2	1/16/14	INITIAL F&F	RH

PROJECT: UNIVERSITY HOSPITAL McDUFFIE
CUSTOMER: J.E. DUNN CONSTRUCTION
ARCHITECT: PERKINS & WILL
LOCATION: THOMSON, GA

DATE: 10/25/13
DWN. BY: RH
CHKD. BY: RW
DRAWING NO. 4.07
PPC JOB NO: 5669

SAVE: 1/16/2014
PRINT: 1/16/2014
J:\Jobs\5669 - UNIVERSITY HOSPITAL MCDUFFIE\SB-FF\5669-SBFF.dwg

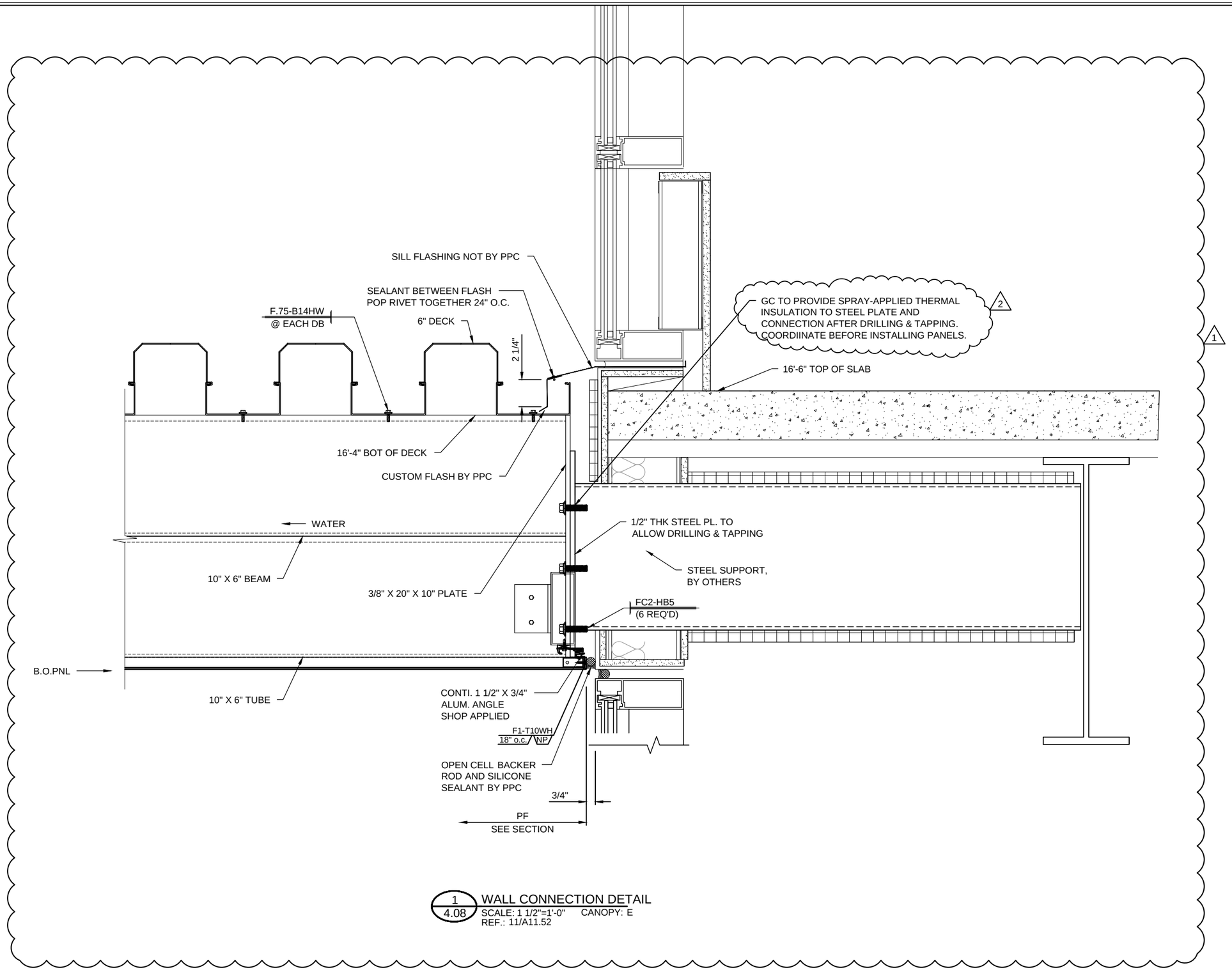

1
4.08
WALL CONNECTION DETAIL
SCALE: 1 1/2"=1'-0" CANOPY: E
REF.: 11/A11.52

Peachtree PROTECTIVE COVERS

REV.:	DATE	SUBJECT	DWG. BY
1	12/23/13	2ND SUBMITTAL	KR
2	1/16/14	INITIAL F&F	RH

PROJECT: UNIVERSITY HOSPITAL McDUFFIE
CUSTOMER: J.E. DUNN CONSTRUCTION
ARCHITECT: PERKINS & WILL
LOCATION: THOMSON, GA

DATE: 10/25/13
DWN. BY: RH
CHKD. BY: RW
DRAWING NO. 4.08
PPC JOB NO. 5669

SAVE: 1/14/2014
PRINT: 1/14/2014
J:\Jobs\5669 - UNIVERSITY HOSPITAL MCDUFFIE\SB-FF\5669-SBFF.dwg

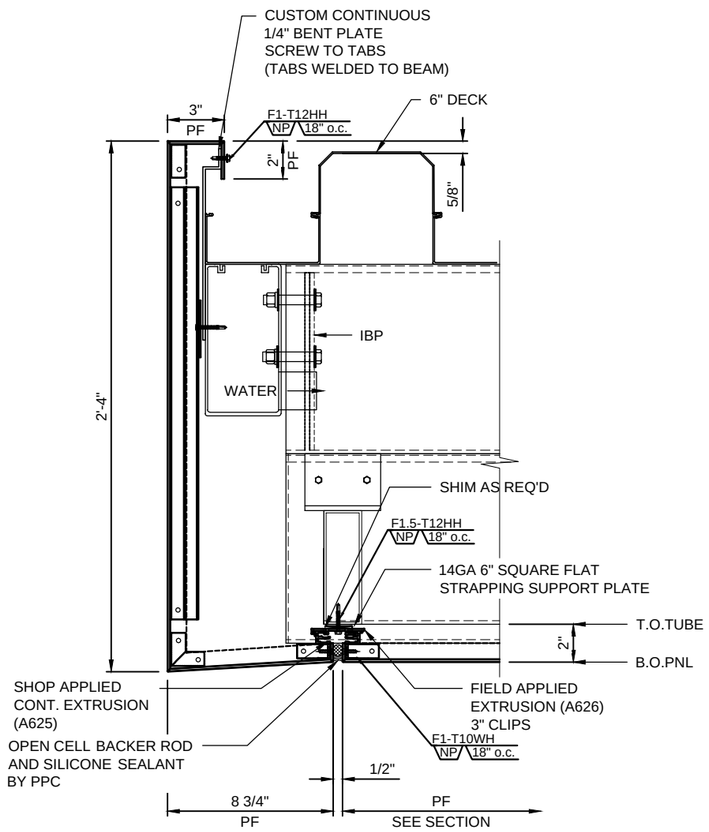

1 / 4.09 ACM SOFFIT FRONT DETAIL
SCALE: 1 1/2"=1'-0" CANOPY
REF.:

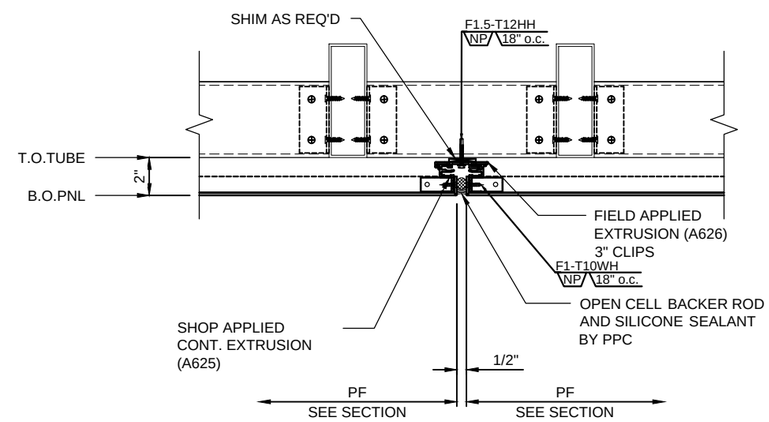

2 / 4.09 ACM VERTICAL JOINT DETAIL
SCALE: 1 1/2"=1'-0" CANOPY
REF.:

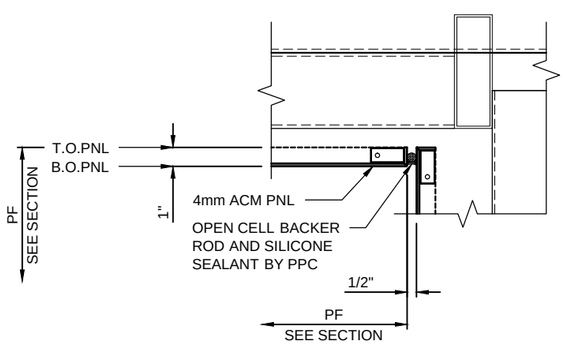

4 / 4.09 ACM COLUMN COVER HEAD DETAIL
SCALE: 1 1/2"=1'-0" CANOPY
REF.:

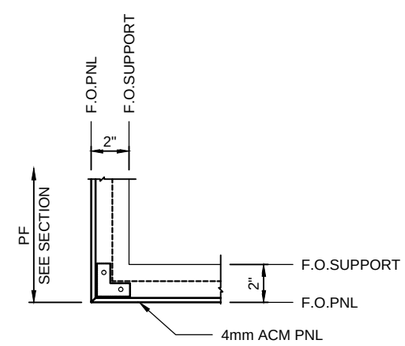

5 / 4.09 ACM OUTSIDE CORNER DETAIL
SCALE: 1 1/2"=1'-0" CANOPY
REF.:

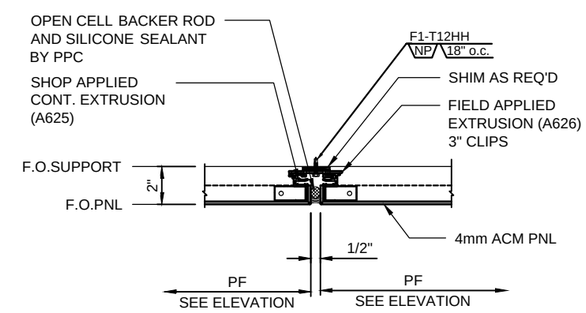

6 / 4.09 ACM VERTICAL JOINT DETAIL
SCALE: 1 1/2"=1'-0" CANOPY
REF.:

Peachtree PROTECTIVE COVERS

REV.:	DATE	SUBJECT	DWG. BY
1	12/23/13	2ND SUBMITTAL	KR

PROJECT: UNIVERSITY HOSPITAL MCDUFFIE
CUSTOMER: J.E. DUNN CONSTRUCTION
ARCHITECT: PERKINS & WILL
LOCATION: THOMSON, GA

DATE: 10/25/13
DWN. BY: RH
CHKD. BY: RW
DRAWING NO. 4.09
PPC JOB NO. 5669

SAVE: 1/16/2014
PRINT: 1/16/2014
J:\Jobs\5669 - UNIVERSITY HOSPITAL MCDUFFIE\SB-FF\5669-SBFF.dwg

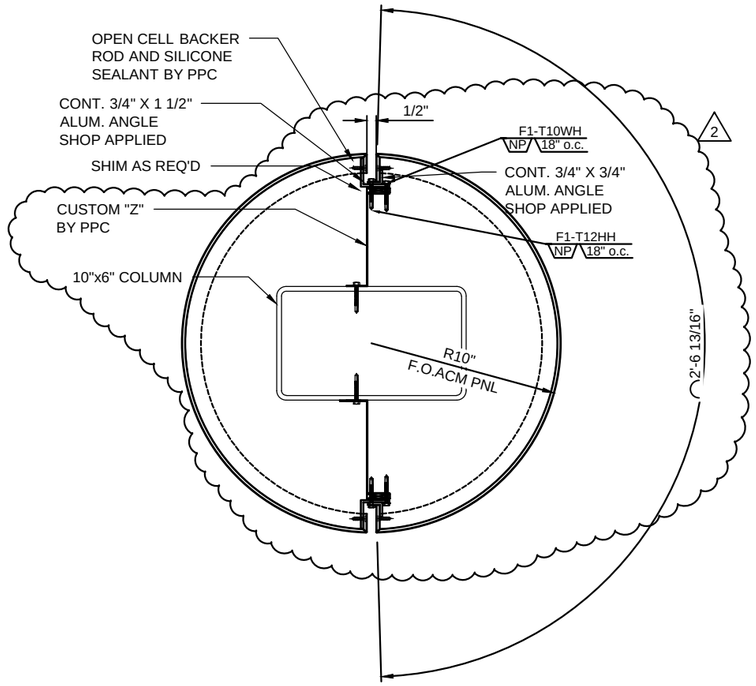

1 / 4.10 ACM COLUMN COVER DETAIL
SCALE: 1 1/2"=1'-0" CANOPY
REF.: 9/A11.30

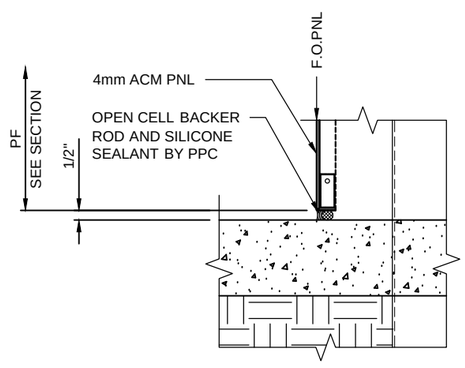

2 / 4.10 ACM COLUMN COVER BASE DETAIL
SCALE: 1 1/2"=1'-0" CANOPY
REF.:

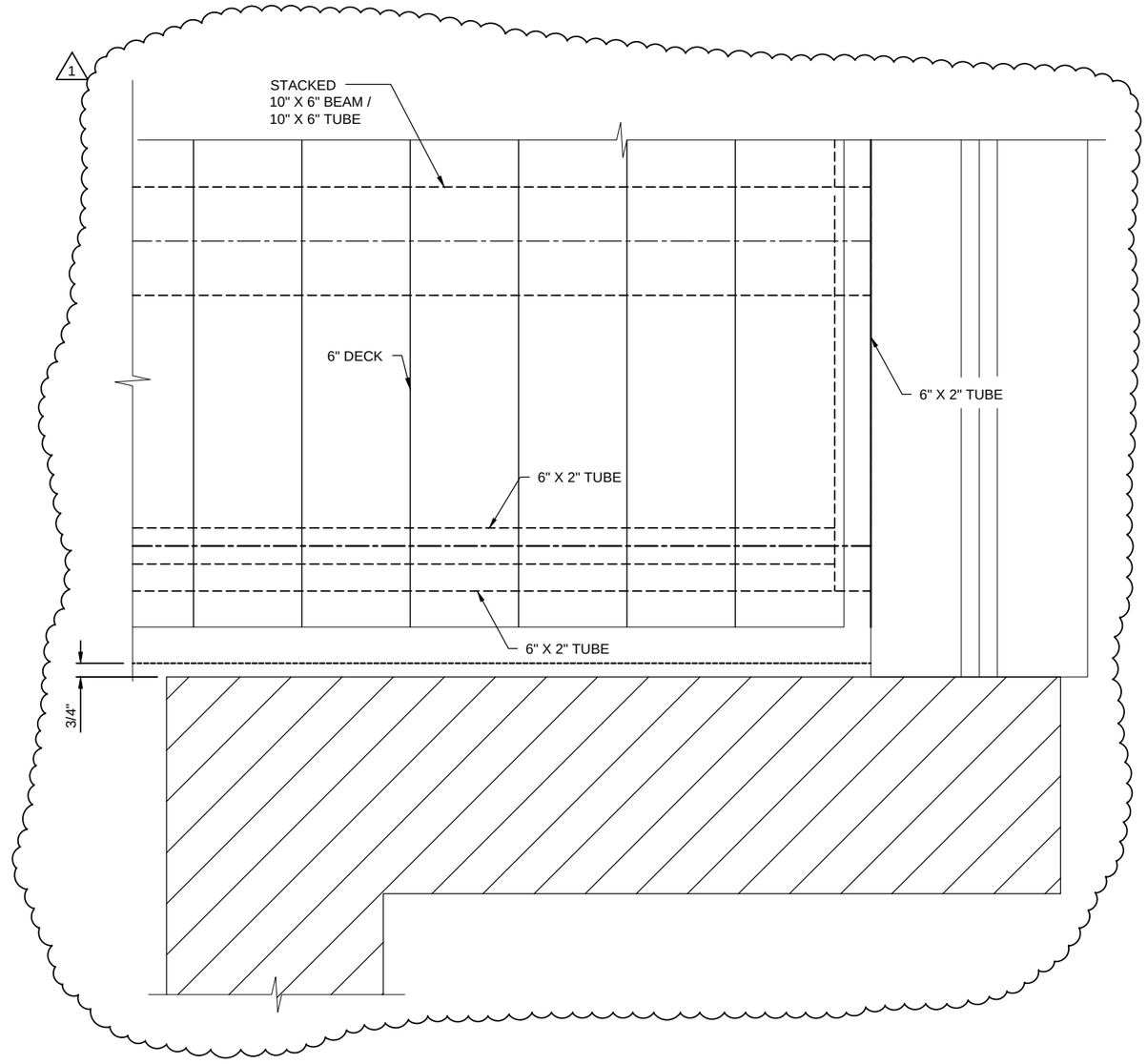

3 / 4.10 WALL CONNECTION DETAIL
SCALE: 1 1/2"=1'-0" CANOPY: E
REF.: 11/A11.52

Peachtree PROTECTIVE COVERS

REV.:	DATE	SUBJECT	DWG. BY
1	12/23/13	2ND SUBMITTAL	RH
2	1/16/14	INITIAL F&F	RH

PROJECT: UNIVERSITY HOSPITAL MCDUFFIE
CUSTOMER: J.E. DUNN CONSTRUCTION
ARCHITECT: PERKINS & WILL
LOCATION: THOMSON, GA

DATE: 10/25/13
DWN. BY: RH
CHKD. BY: RW
DRAWING NO. 4.10
PPC JOB NO. 5669

SAVE: 1/16/2014
PRINT: 1/16/2014
J:\Jobs\5669 - UNIVERSITY HOSPITAL MCDUFFIE\SB-FF\5669-SBFF.dwg

DETAIL NOT USED

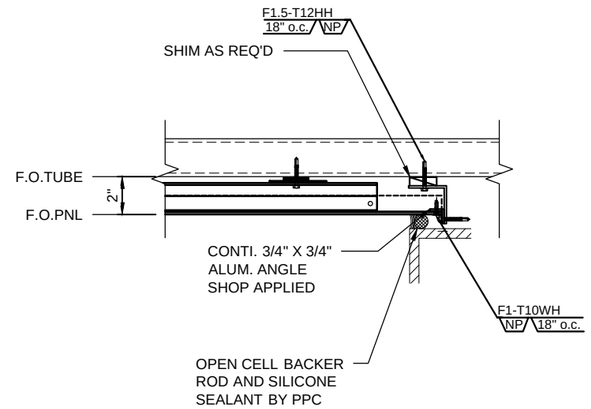

1 / 4.11 ACM VERTICAL JOINT DETAIL
SCALE: 1 1/2"=1'-0" CANOPY
REF.:

2 / 4.11 ACM ENDWALL DETAIL
SCALE: 1 1/2"=1'-0" CANOPY
REF.:

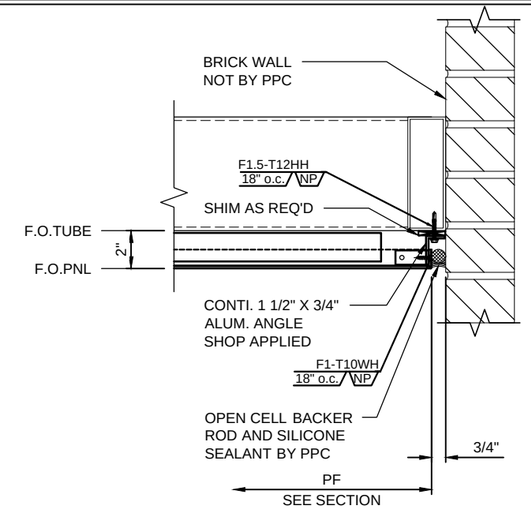

3 / 4.11 ACM SOFFIT ENDWALL DETAIL
SCALE: 1 1/2"=1'-0" CANOPY
REF.:

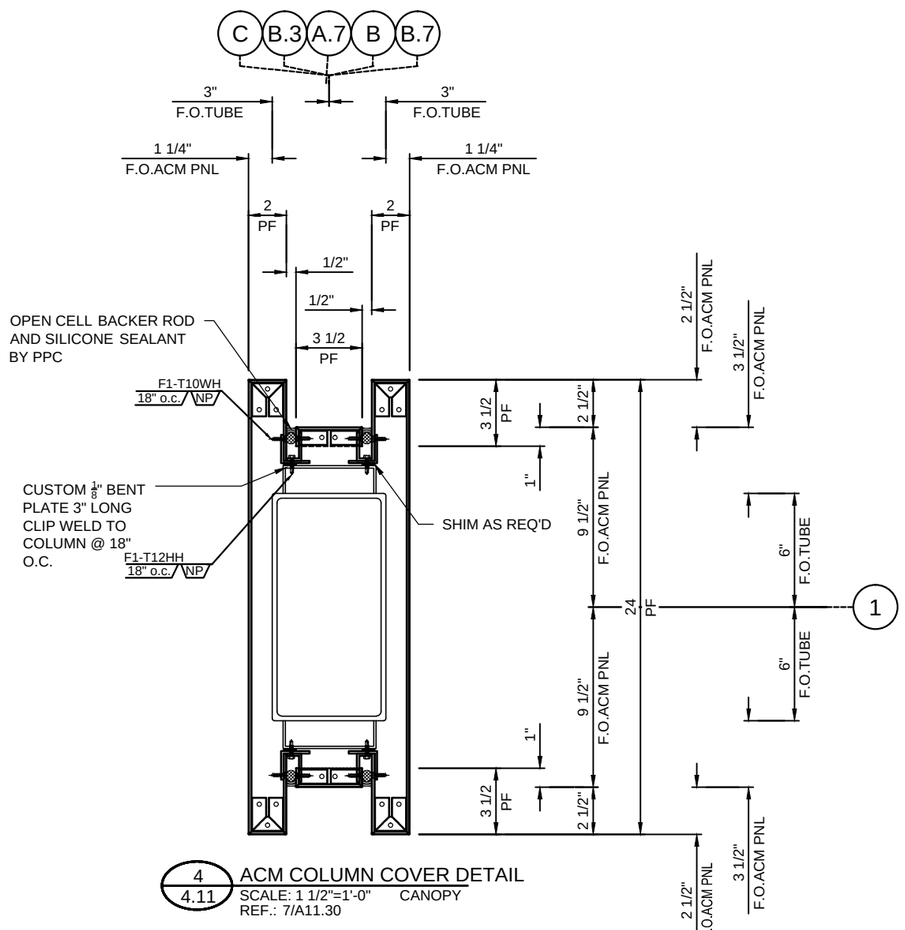

4 / 4.11 ACM COLUMN COVER DETAIL
SCALE: 1 1/2"=1'-0" CANOPY
REF.: 7/A11.30

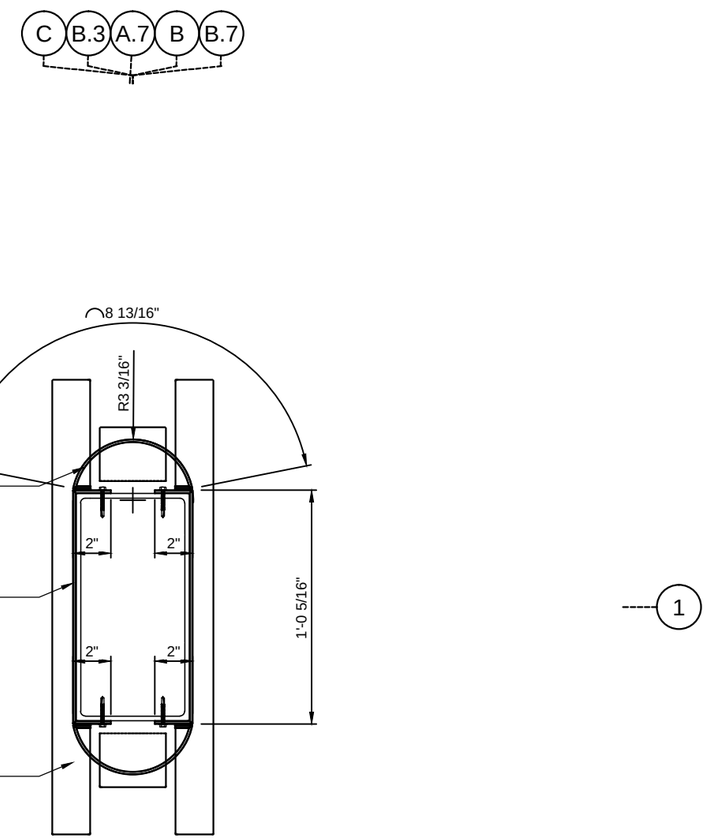

5 / 4.11 ACM COLUMN COVER DETAIL
SCALE: 1 1/2"=1'-0" CANOPY
REF.: 7/A11.30

Peachtree PROTECTIVE COVERS

REV.:	DATE	SUBJECT	DWG. BY
1	12/23/13	2ND SUBMITTAL	KR

PROJECT: UNIVERSITY HOSPITAL MCDUFFIE
CUSTOMER: J.E. DUNN CONSTRUCTION
ARCHITECT: PERKINS & WILL
LOCATION: THOMSON, GA

DATE: 10/25/13
DWN. BY: RH
CHKD. BY: RW
DRAWING NO. 4.11
PPC JOB NO. 5669

SAVE: 1/16/2014
PRINT: 1/16/2014
J:\Jobs\5669 - UNIVERSITY HOSPITAL MCDUFFIE\SB-FF\5669-SBFF.dwg

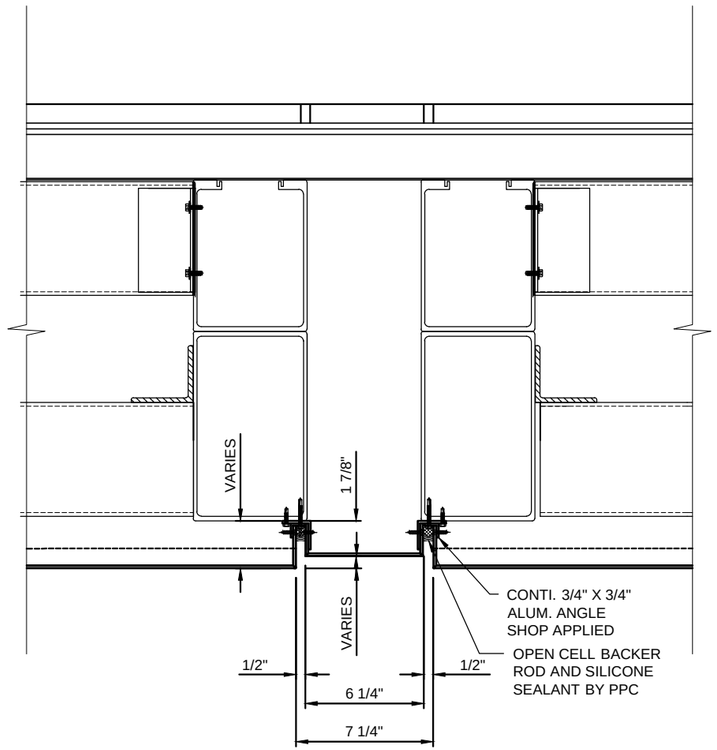

1 / 4.12 ACM PNL DETAIL
SCALE: 1 1/2"=1'-0" CANOPY: D
REF.:

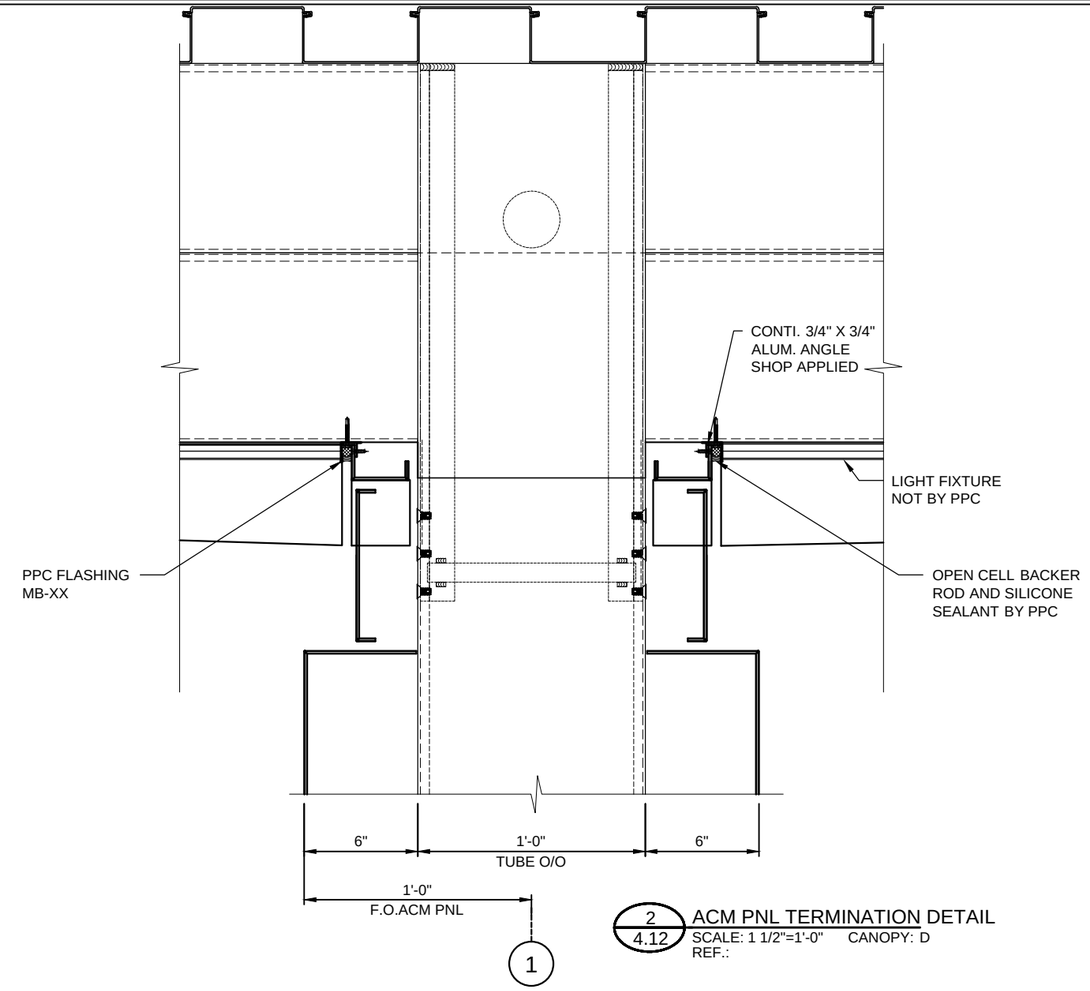

2 / 4.12 ACM PNL TERMINATION DETAIL
SCALE: 1 1/2"=1'-0" CANOPY: D
REF.:

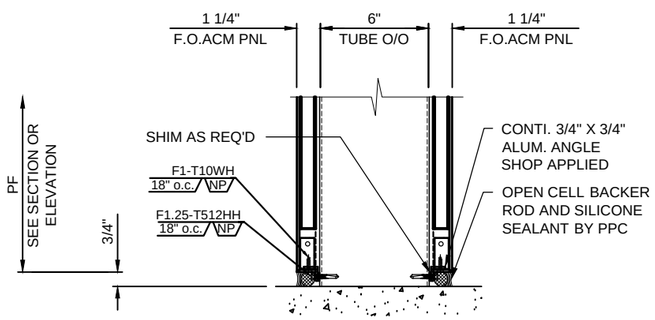

3 / 4.12 ACM COLUMN COVER BASE DETAIL
SCALE: 1 1/2"=1'-0" CANOPY: D
REF.:

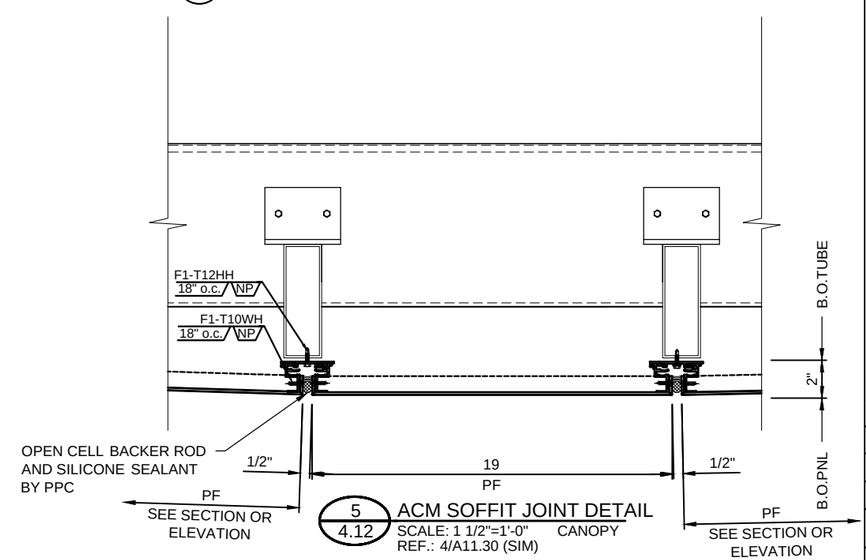

5 / 4.12 ACM SOFFIT JOINT DETAIL
SCALE: 1 1/2"=1'-0" CANOPY
REF.: 4/A11.30 (SIM)

Peachtree PROTECTIVE COVERS

REV.:	DATE	SUBJECT	DWG. BY
1	12/23/13	2ND SUBMITTAL	KR

PROJECT: UNIVERSITY HOSPITAL MCDUFFIE
CUSTOMER: J.E. DUNN CONSTRUCTION
ARCHITECT: PERKINS & WILL
LOCATION: THOMSON, GA

DATE: 10/25/13
DWN. BY: RH
CHKD. BY: RW
DRAWING NO. 4.12
PPC JOB NO. 5669

SAVE: 1/16/2014
PRINT: 1/16/2014
J:\Jobs\5669 - UNIVERSITY HOSPITAL MCDUFFIE\SB-FF\5669-SBFF.dwg

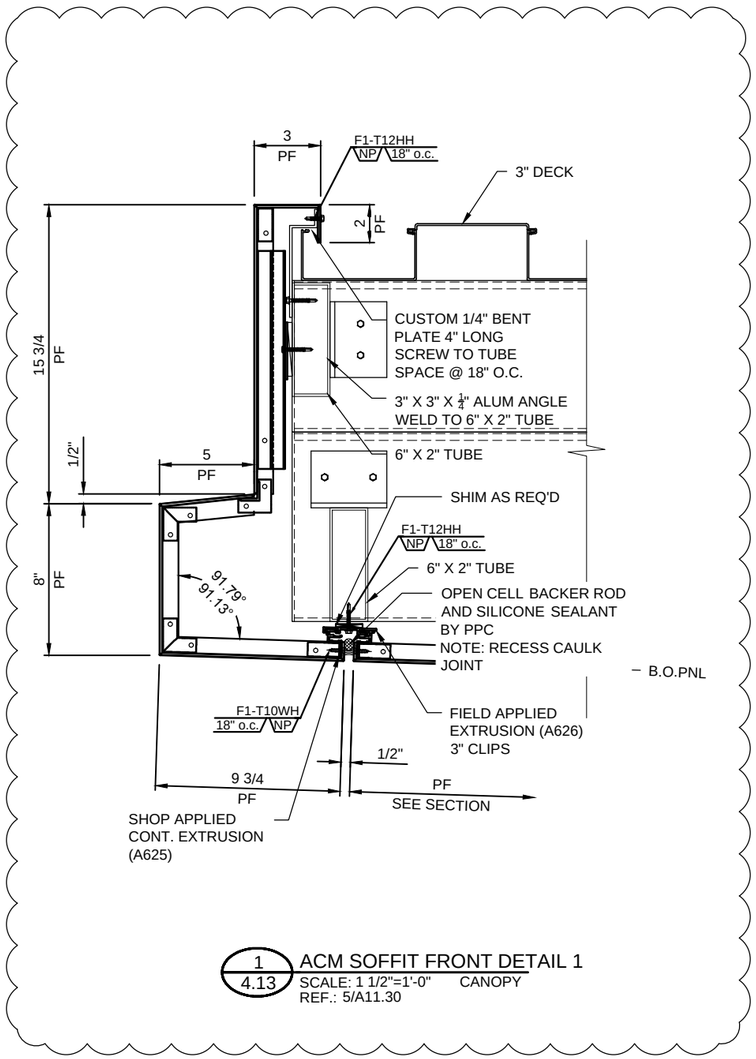

1 / 4.13 ACM SOFFIT FRONT DETAIL 1
SCALE: 1 1/2"=1'-0" CANOPY
REF.: 5/A11.30

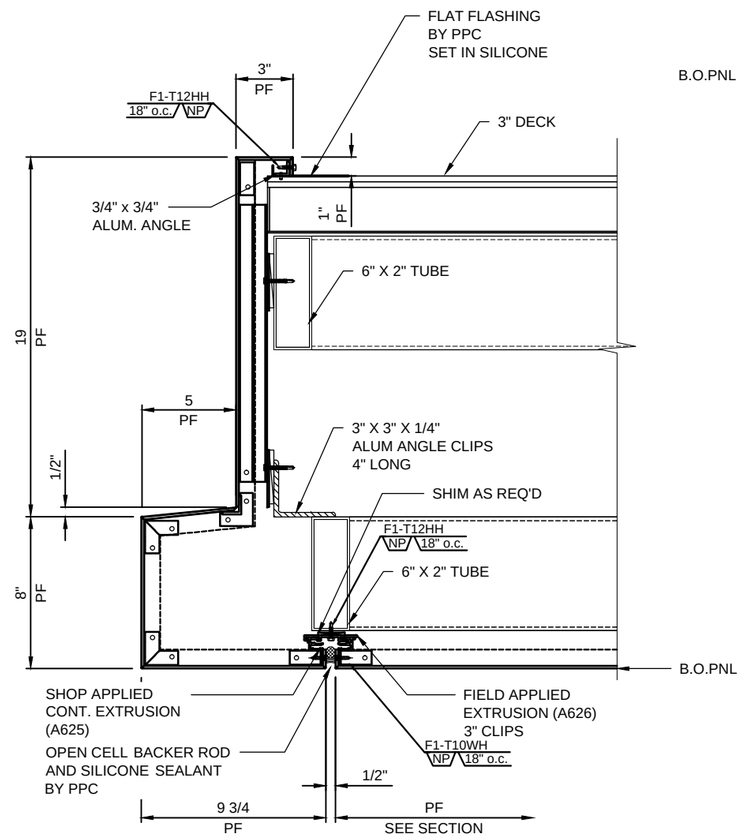

2 / 4.13 ACM SOFFIT FRONT DETAIL 2
SCALE: 1 1/2"=1'-0" CANOPY
REF.: 5/A11.30 (SIM)

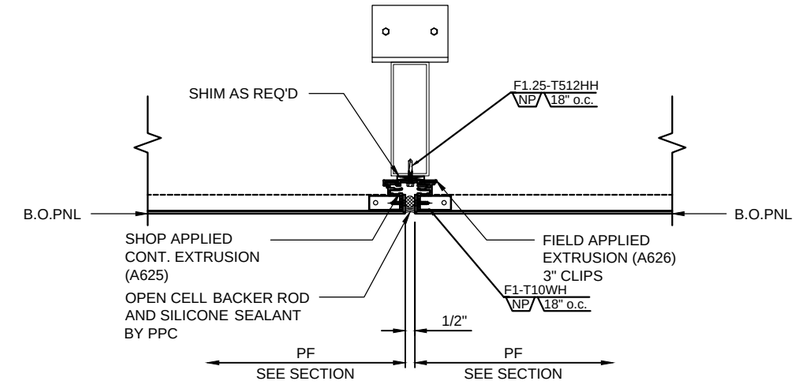

3 / 4.13 ACM SOFFIT JOINT DETAIL
SCALE: 1 1/2"=1'-0" CANOPY
REF.:

Peachtree PROTECTIVE COVERS

REV.:	DATE	SUBJECT	DWG. BY
1	12/23/13	2ND SUBMITTAL	KR

PROJECT: UNIVERSITY HOSPITAL MCDUFFIE
CUSTOMER: J.E. DUNN CONSTRUCTION
ARCHITECT: PERKINS & WILL
LOCATION: THOMSON, GA

DATE: 10/25/13
DWN. BY: RH
CHKD. BY: RW
DRAWING NO. 4.13
PPC JOB NO. 5669

SAVE: 1/14/2014
PRINT: 1/14/2014
J:\Jobs\5669 - UNIVERSITY HOSPITAL MCDUFFIE\SB-FF\5669-SBFF.dwg

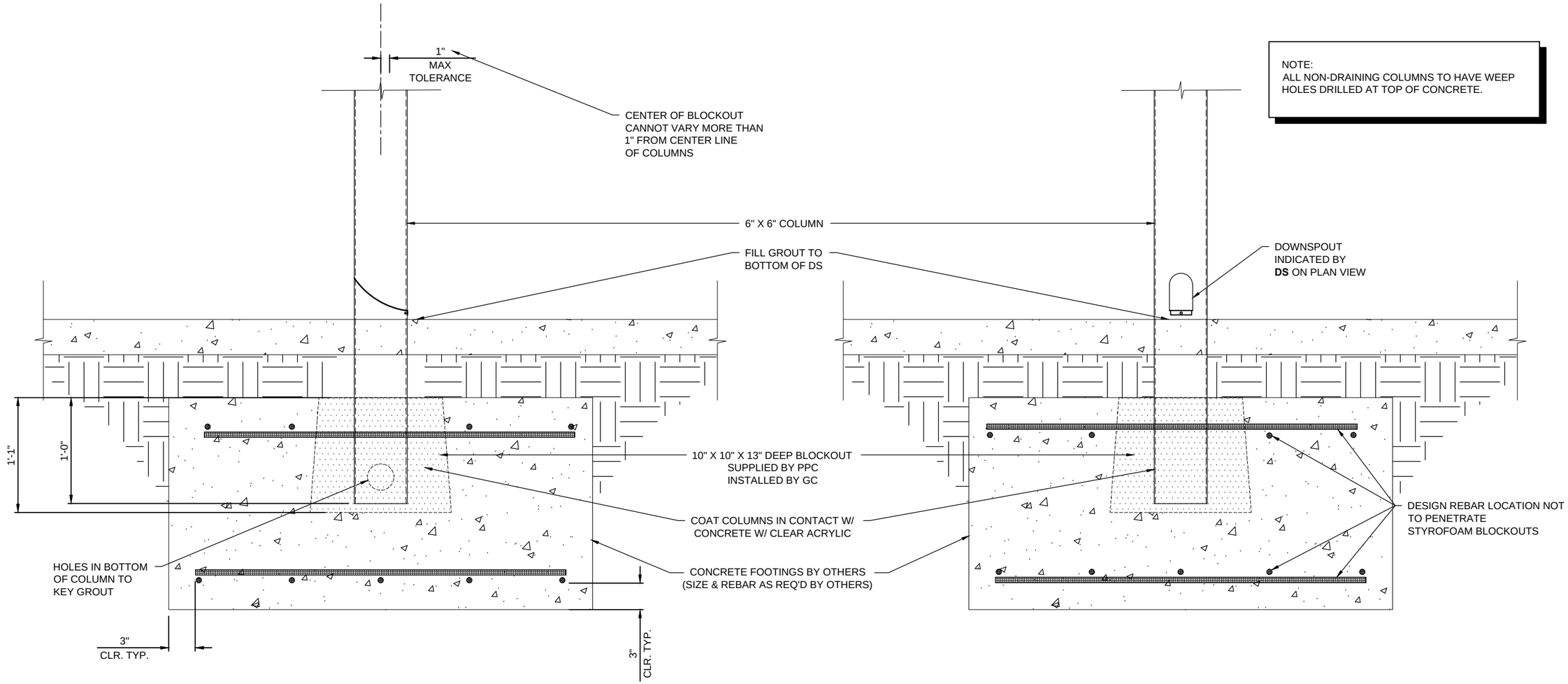

NOTE:
ALL NON-DRAINING COLUMNS TO HAVE WEEP HOLES DRILLED AT TOP OF CONCRETE.

1 / 5.00 BLOCKOUT DETAIL
SCALE: 1"=1'-0"
REF.:
CANOPIES A & C
1

GC & ARCHITECT NOTE:
PLEASE DESIGN FOOTINGS TO RESIST THE REACTION LOADS INDICATED ON SECTIONS 1/3.00 & 2/3.00

BLOCKOUT SCHEDULE

LABEL	DETAIL	BLOCKOUT	CANOPY
B1	1/5.00	10" X 10" X 13"	CANOPIES A & C
B2	1/5.01	10" X 10" X 13"	CANOPY B
B3	1/5.02	16" X 16" X 25"	CANOPY D
B4	1/5.03	12" X 12" X 13"	CANOPY E

1

Peachtree PROTECTIVE COVERS

REV.:	DATE	SUBJECT	DWG. BY
1	12/23/13	2ND SUBMITTAL	RH

PROJECT: UNIVERSITY HOSPITAL McDUFFIE
CUSTOMER: J.E. DUNN CONSTRUCTION
ARCHITECT: PERKINS & WILL
LOCATION: THOMSON, GA

DATE: 10/25/13
DWN. BY: RH
CHKD. BY: RW
DRAWING NO. 5.00
PPC JOB NO. 5669

SAVE: 1/16/2014
PRINT: 1/16/2014
J:\Jobs\5669 - UNIVERSITY HOSPITAL MCDUFFIE\SB-FF\5669-SBFF.dwg

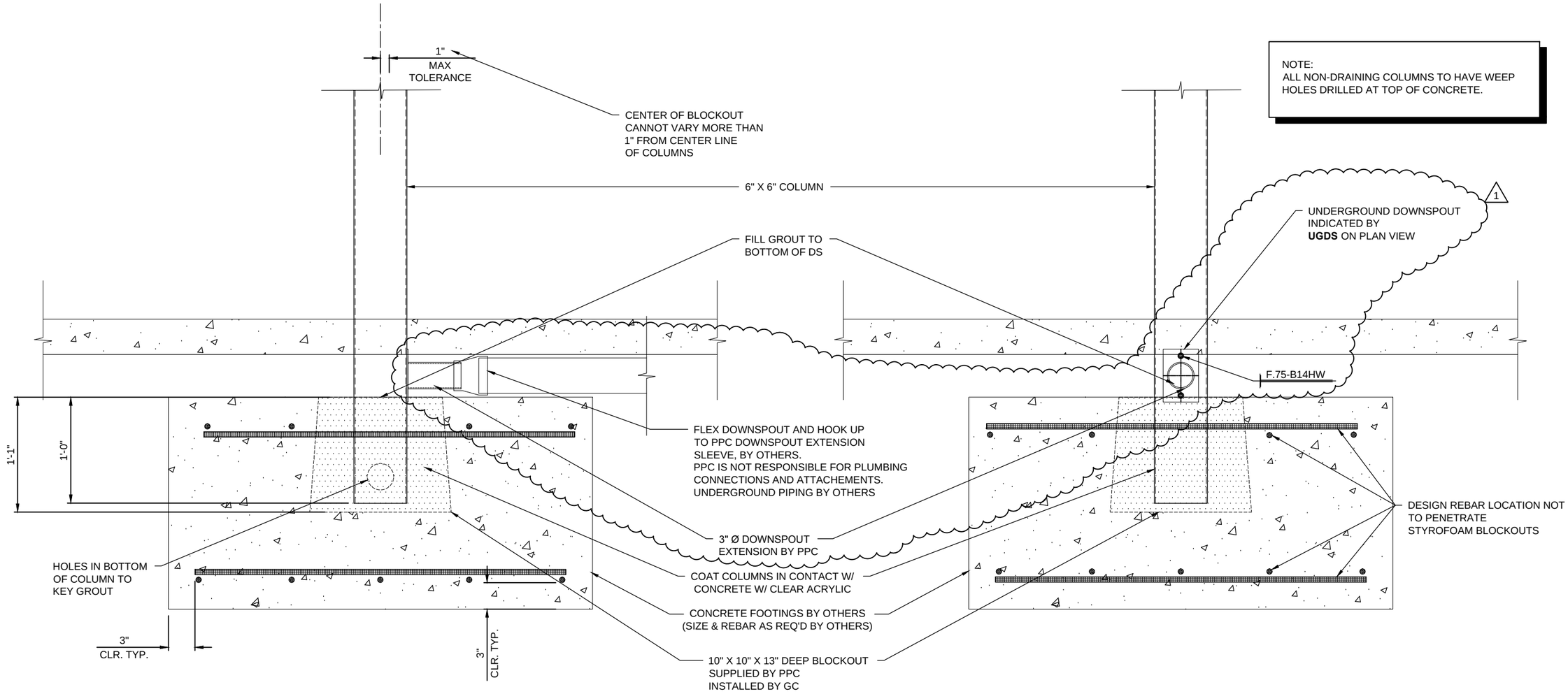

NOTE:
ALL NON-DRAINING COLUMNS TO HAVE WEEP HOLES DRILLED AT TOP OF CONCRETE.

1 / 5.01 BLOCKOUT DETAIL
SCALE: 1"=1'-0" CANOPY: B
REF.:

GC & ARCHITECT NOTE:
PLEASE DESIGN FOOTINGS TO RESIST THE REACTION LOADS INDICATED ON SECTION 1/3.01

Peachtree PROTECTIVE COVERS

REV.:	DATE	SUBJECT	DWG. BY
1	12/23/13	2ND SUBMITTAL	RH

PROJECT: UNIVERSITY HOSPITAL McDUFFIE
CUSTOMER: J.E. DUNN CONSTRUCTION
ARCHITECT: PERKINS & WILL
LOCATION: THOMSON, GA

DATE: 10/25/13
DWN. BY: RH
CHKD. BY: RW
DRAWING NO. 5.01
PPC JOB NO. 5669

PRINT: 1/14/2014 SAVE: 1/14/2014
J:\Jobs\5669 - UNIVERSITY HOSPITAL MCDUFFIE\SB-FF\5669-SBFF.dwg

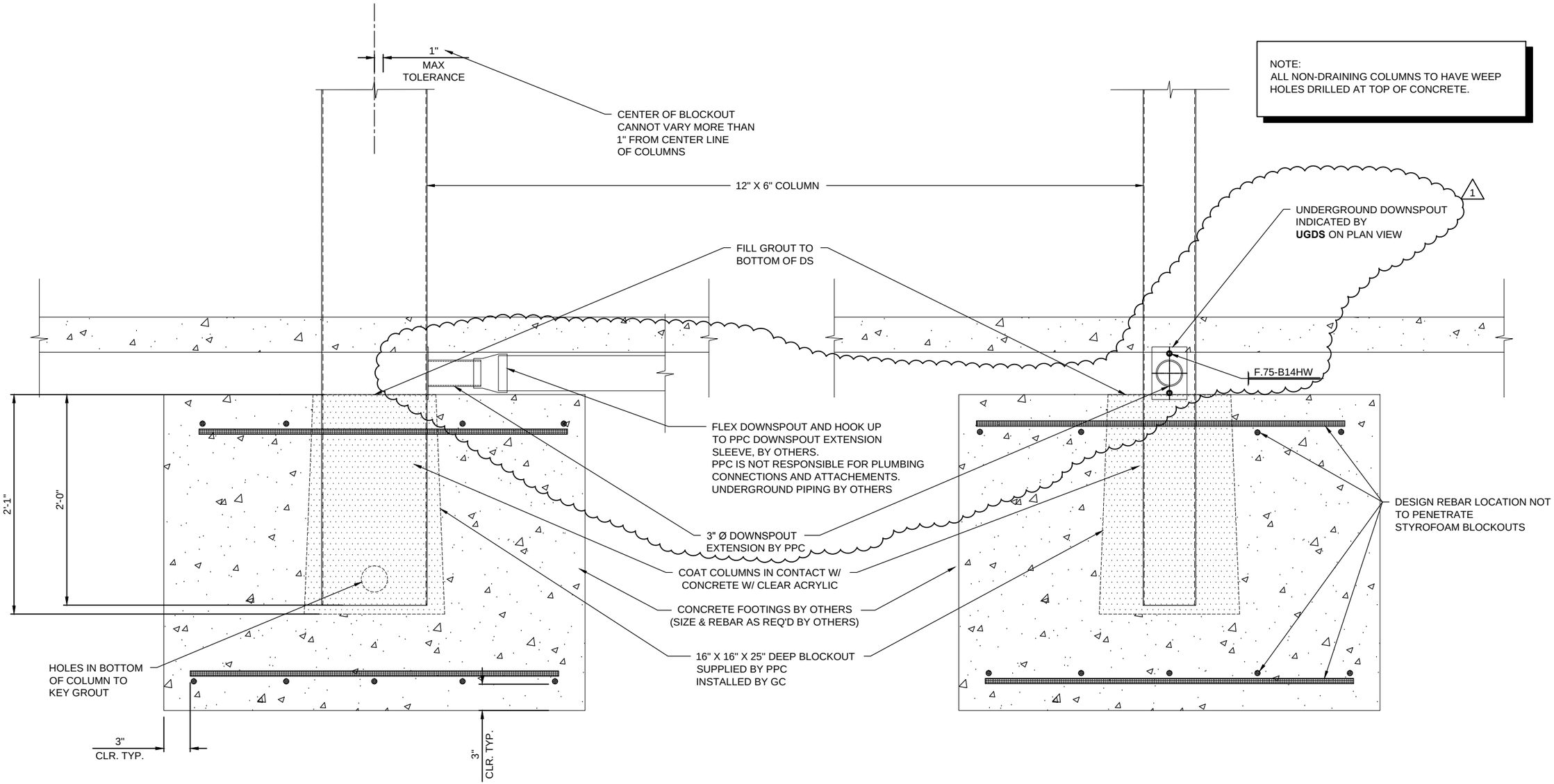

NOTE:
ALL NON-DRAINING COLUMNS TO HAVE WEEP HOLES DRILLED AT TOP OF CONCRETE.

1 / 5.02 BLOCKOUT DETAIL
SCALE: 1"=1'-0" CANOPY: D
REF.:

GC & ARCHITECT NOTE:
PLEASE DESIGN FOOTINGS TO RESIST THE REACTION LOADS INDICATED ON SECTION 1/3.02

Peachtree PROTECTIVE COVERS

REV.:	DATE	SUBJECT	DWG. BY
1	12/23/13	2ND SUBMITTAL	RH

PROJECT: UNIVERSITY HOSPITAL McDUFFIE
CUSTOMER: J.E. DUNN CONSTRUCTION
ARCHITECT: PERKINS & WILL
LOCATION: THOMSON, GA

DATE: 10/25/13
DWN. BY: RH
CHKD. BY: RW
DRAWING NO. 5.02
PPC JOB NO. 5669

SAVE: 1/16/2014
PRINT: 1/16/2014
J:\Jobs\5669 - UNIVERSITY HOSPITAL MCDUFFIE\SB-FF\5669-SBFF.dwg

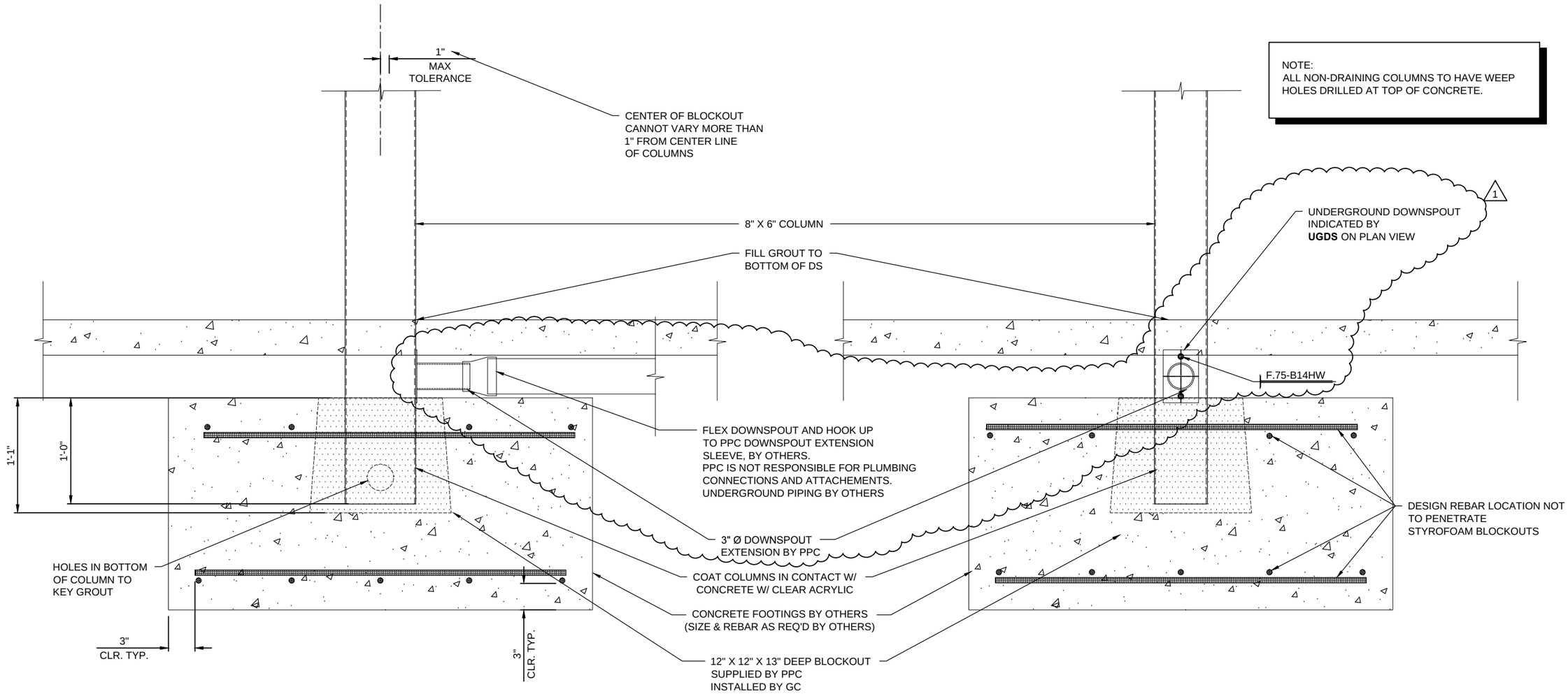

NOTE:
ALL NON-DRAINING COLUMNS TO HAVE WEEP HOLES DRILLED AT TOP OF CONCRETE.

1 / 5.03 BLOCKOUT DETAIL
SCALE: 1"=1'-0" CANOPY: E
REF.:

GC & ARCHITECT NOTE:
PLEASE DESIGN FOOTINGS TO RESIST THE REACTION LOADS INDICATED ON SECTION 1/3.03

Peachtree PROTECTIVE COVERS

REV.:	DATE	SUBJECT	DWG. BY
1	12/23/13	2ND SUBMITTAL	RH

PROJECT: UNIVERSITY HOSPITAL McDUFFIE
CUSTOMER: J.E. DUNN CONSTRUCTION
ARCHITECT: PERKINS & WILL
LOCATION: THOMSON, GA

DATE: 10/25/13
DWN. BY: RH
CHKD. BY: RW
DRAWING NO. 5.03
PPC JOB NO. 5669

PRINT: 1/14/2014 SAVE: 1/14/2014
J:\Jobs\5669 - UNIVERSITY HOSPITAL MCDUFFIE\SB-FF\5669-SBFF.dwg

FASTENER SCHEDULE

FASTENER IDENTIFICATION

F2-B14HW

- LENGTH OF FASTENER
- IDENTFY DRILL POINT TYPE FOR SCREWS OF TYPE OF BOLT (SEE CHART)
- FASTENER HEAD TYPE (FOR SCREWS ONLY)(SEE CHART)
- DIAMETER OF FASTENER (SEE CHART)
- F=FASTENER

FASTENER ACCESORIES IDENTIFICATION

FA -LW5

- TYPE (SEE CHART)
- DIAMETER OF FASTENER
- FA=FASTENER ACCESSORIES

FASTENER COMBO IDENTIFICATION

FC2.5 -LW5

- LENGTH OF FASTENER
- TYPE (SEE CHART)
- DIAMETER OF FASTENER
- FC=FASTENER COMBO (MADE UP OF "F" AND "FA")

FASTENER MISC. IDENTIFICATION

FM2.5 -SSSS

- LENGTH OF FASTENER
- IDENTIFIER - SEE FASTENER SHEETS
- FM=FASTENER MISC.

FASTENER DIAMETER CHART

- 10 = #10
- 12 = #12
- 14 = #14
- 2 = .250" (1/4")
- 3 = .375" (3/8")
- 5 = .500" (1/2")
- 6 = .625" (5/8")
- 7 = .750" (3/4")

F=FASTENER

- B — B POINT
- BB — BUTTON HEAD BOLT
- CB — COUNTER SUNK BOLT
- EBR — EYE BOLT RIGHT HAND THREAD
- EBL — LEFT HAND THREAD
- HB — HEX HEAD BOLT
- LB — LAG BOLT
- SB — SHOULDER BOLT
- T — TEK
- TC — TAPCON
- TR — THREADED ROD
- W — WOOD SCREW

FA=FASTENER ACCESSORIES

- AN — ACORN NUT
- BW — BONDED WASHER
- FW — FLAT WASHER
- JN — JAM NUT
- IW — INTERNAL WASHER
- LS — LAG SHIELD
- LW — LOCK WASHER
- N — NUT
- NS — NUTSERT

FC=FASTENER COMBO

- BBP — BACK TO BACK IBP
- CHU — CUSTOM HANGER CANOPY UPPER
- CHL — CUSTOM HANGER CANOPY LOWER
- EAS — EPOXY ANCHOR WITH SCREEN
- EABP — EPOXY ANCHOR WITH STANDOFF BASEPLATE
- EASC — EPOXY ANCHOR WITH SCREEN & COMP. SLEEVE
- HCU — HANGER CANOPY UPPER BRACKET
- IBP — INTERNAL BOLT PLATE
- NMJ — NEW MECH JOINT
- NS — NUTSERT
- OMB — OLD MECH. JOINT W/ BUTTON HEAD
- OMC — OLD MECH. JOINT W/ COUNTER SUNK
- TBP — THRU BOLT WITH BACKER PLATE
- TBPC — THRU BOLT WITH BACKER PLATE W/COMP. SLEEVE
- DT — DRILL & TAP THREADED ROD
- DTC — DRILL & TAP THREADED ROD W/COMP. SLEEVE

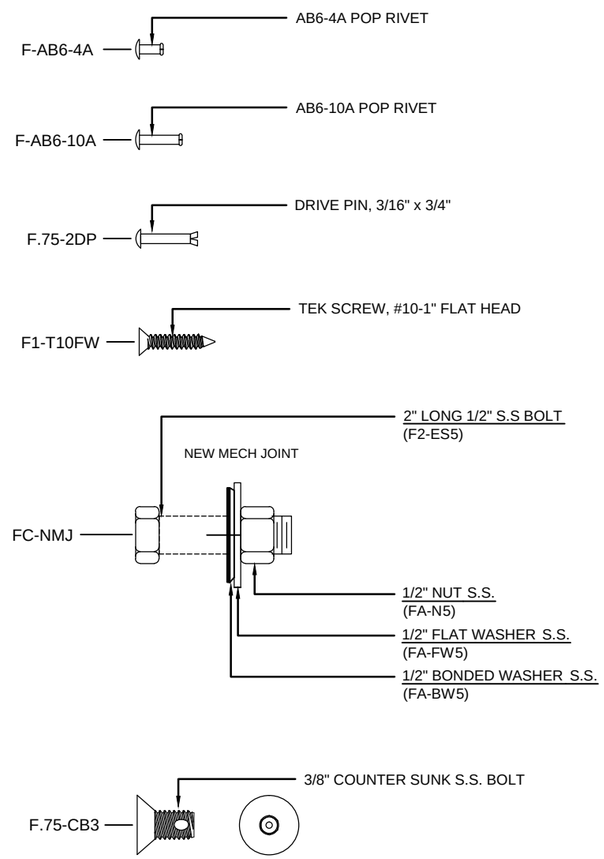

F##-B14HW

14B S.S FASTENER W/ NEOPRENE WASHER	
F.75-B14HW	3/4" LONG FASTENER
F1.5-B14HW	1 1/2" LONG FASTENER
F2-B14HW	2" LONG FASTENER
F3-B14HW	3" LONG FASTENER
F5-B14HW	5" LONG FASTENER

F##-HB5

1/2" Ø S.S. HEX HEAD BOLT #13 THREAD	
F2-HB5	2" LONG BOLT
F2.5-HB5	2.5" LONG BOLT
F3.5-HB5	3.5" LONG BOLT

FASTENER ACCESSORIES

FA-N#		FA-FW#		FA-LW#	
S.S. NUT		S.S. FLAT WASHER		S.S. LOCK WASHER	
FA-N3	3/8" NUT	FA-FW3	3/8" WASHER	FA-LW3	3/8" WASHER
FA-N5	1/2" NUT	FA-FW5	1/2" WASHER	FA-LW5	1/2" WASHER
FA-N6	5/8" NUT	FA-FW6	5/8" WASHER	FA-LW6	5/8" WASHER

1

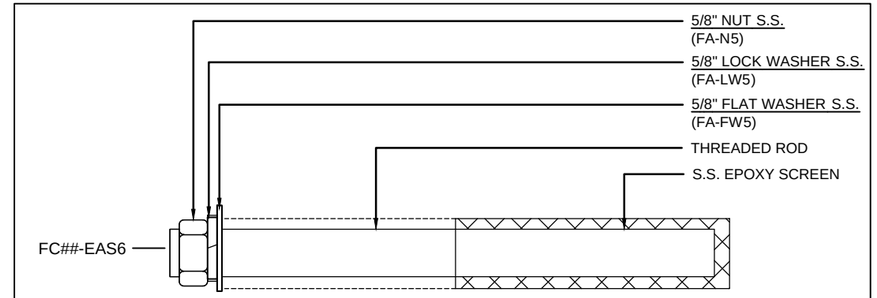

1/2" Ø S.S. THREADED ROD W/ RED HEAD A7 EPOXY ADHESIVE			
FC6-EAS5	6" LONG THREADED ROD	4" MINIMUM EMBEDMENT	
FC8-EAS6	8" LONG THREADED ROD	4" MINIMUM EMBEDMENT	
FC18-EAS6	18" LONG THREADED ROD	15" MINIMUM EMBEDMENT	
FC24-EAS5	24" LONG THREADED ROD	4" MINIMUM EMBEDMENT	

Peachtree PROTECTIVE COVERS

REV.:	DATE	SUBJECT	DWG. BY
1	12/23/13	2ND SUBMITTAL	RH

PROJECT: UNIVERSITY HOSPITAL McDUFFIE
CUSTOMER: J.E. DUNN CONSTRUCTION
ARCHITECT: PERKINS & WILL
LOCATION: THOMSON, GA

DATE: 10/25/13
DWN. BY: RH
CHKD. BY: RW
DRAWING NO. 6.00
PPC JOB NO. 5669

SAVE: 1/14/2014
PRINT: 1/14/2014
J:\Jobs\5669 - UNIVERSITY HOSPITAL MCDUFFIE\SB-FF\5669-SBFF.dwg